SAMSUNG CONFIDENTIAL
THIS DOCUMENT CONTAINS CONFIDENTIAL
PROPRIETARY INFORMATION THAT IS
SAMSUNG ELECTRONICS CO'S PROPERTY.
DO NOT DISCLOSE TO OR DUPLICATE FOR OTHERS
EXCEPT AS AUTHORIZED BY SAMSUNG.

A33 5G REV0.3A

SM-A336B

2021.12.06

Sheet01 : GSM / WCDMA / LTE / NR(N41) RF
Sheet02 : TRANSCEIVER, SUB ANT
Sheet03 : CONNECTIVITY(BT/WIFI/FM), NFC
Sheet04 : AP(PAPAYA-INTERFACE,GPIO)
Sheet05 : AP(POWER), MEM(uMCP)
Sheet06 : PMIC/SUB PMIC, IF PMIC
Sheet07 : AUDIO Codec, SENSOR, SIM, SD
Sheet08 : CAMERA
Sheet09 : DISPLAY PMIC, C2C

SAMSUNG CONFIDENTIAL
THIS DOCUMENT CONTAINS CONFIDENTIAL
AND PROPRIETARY INFORMATION OF
SAMSUNG ELECTRONICS CO. LTD. PROPERTY.
DO NOT DISCLOSE TO OR DUPLICATE FOR OTHERS
EXCEPT AS AUTHORIZED BY SAMSUNG.

RF PART 1

MAIN ANT1 LB

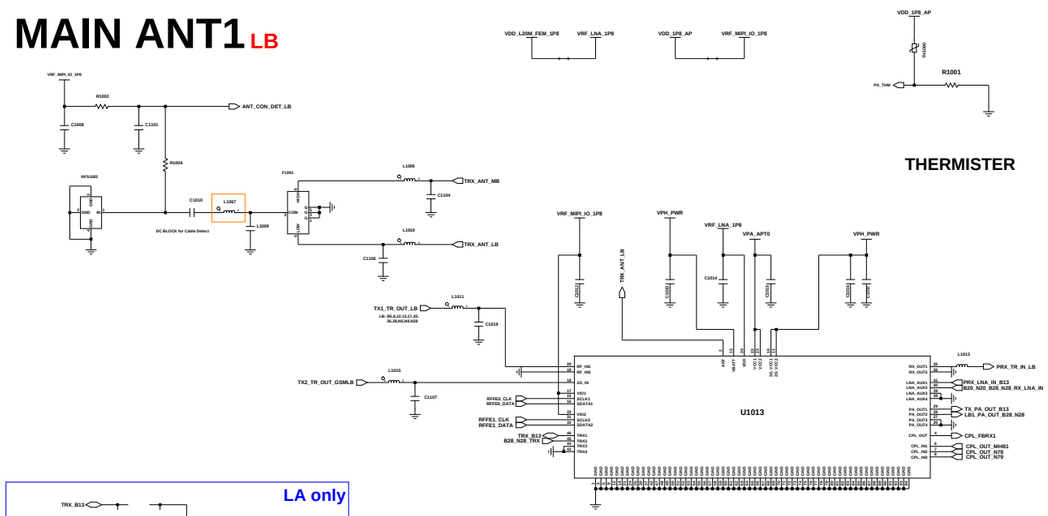

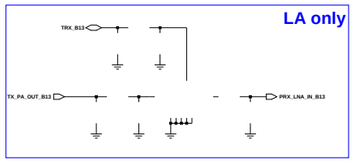

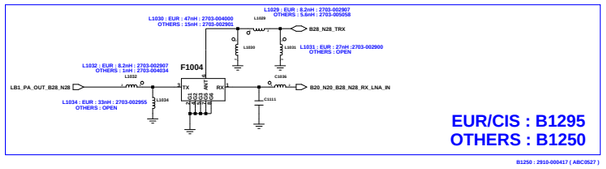

MAIN ANT2

MHB, n78/79 DRX

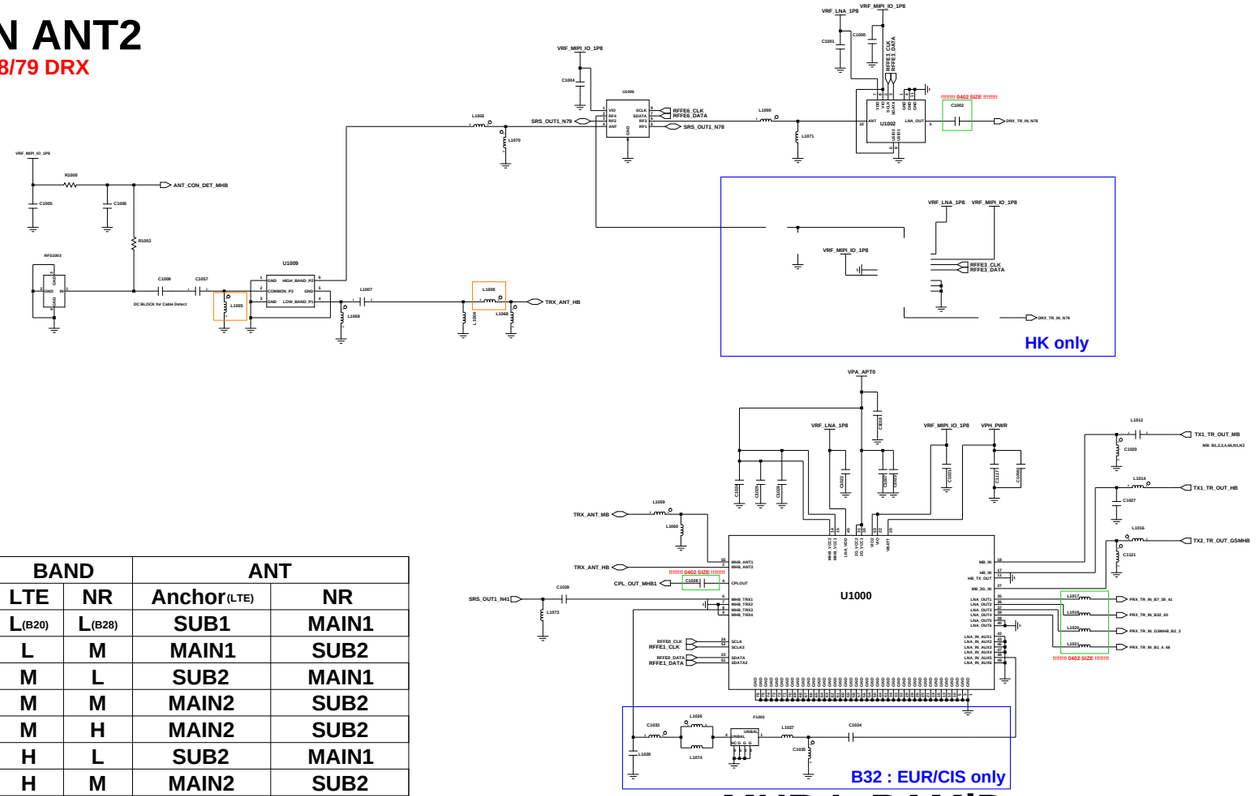

BAND		ANT	
LTE	NR	Anchor(LTE)	NR
L(B20)	L(B28)	SUB1	MAIN1
L	M	MAIN1	SUB2
M	L	SUB2	MAIN1
M	M	MAIN2	SUB2
M	H	MAIN2	SUB2
H	L	SUB2	MAIN1
H	M	MAIN2	SUB2
L/M/H	UHB	MAIN	SUB

SUB ANT1

LB
HB MIMO

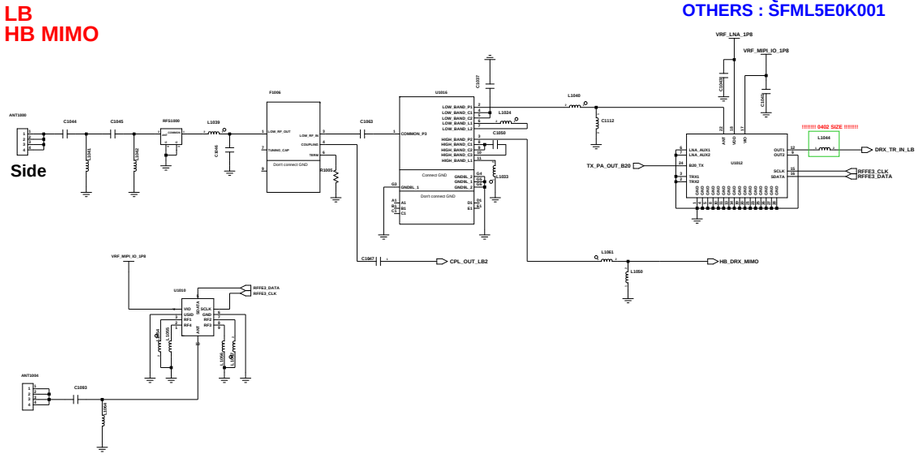

SUB ANT2

GPS, MHB, WiFi 2.4G

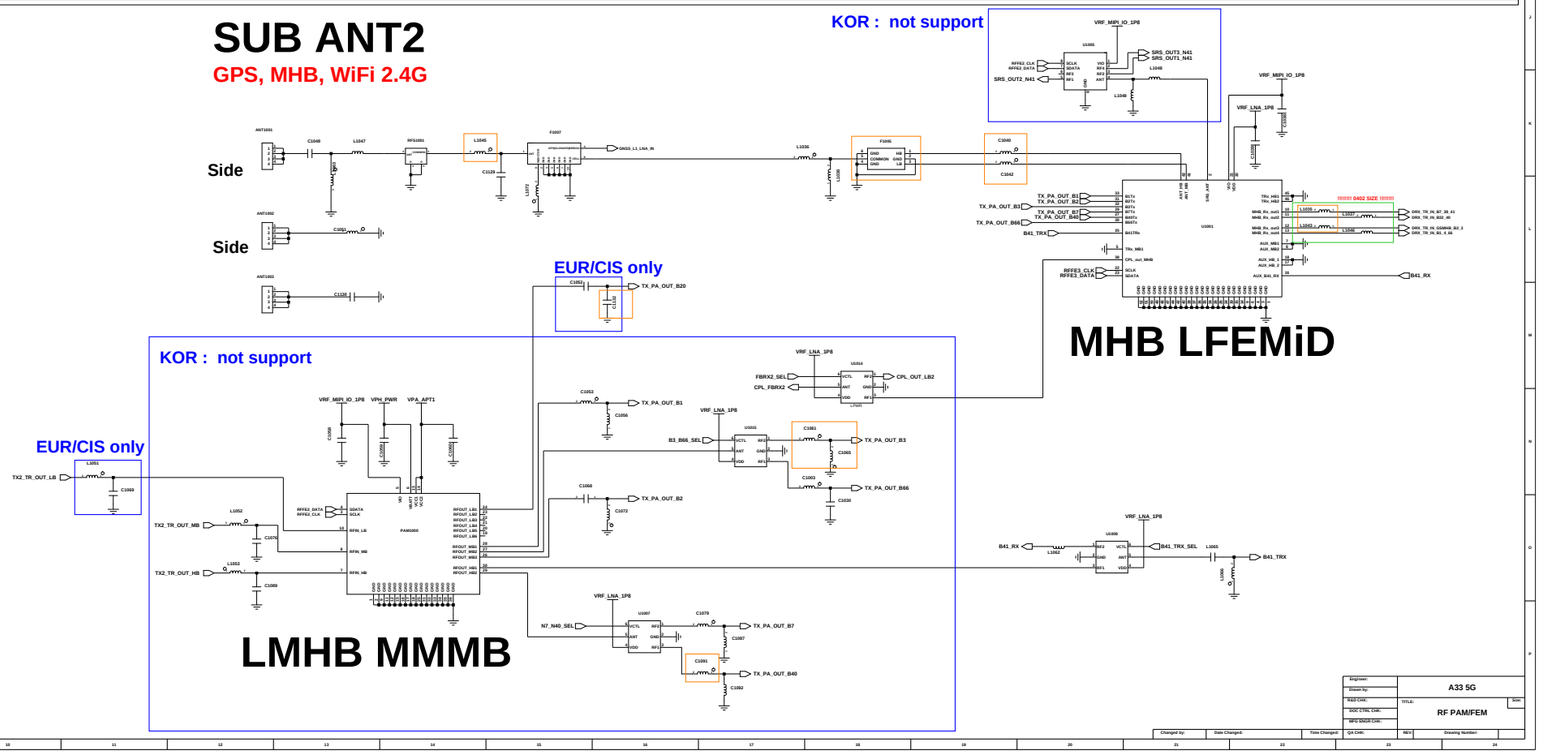

SAMSUNG CONFIDENTIAL
THIS DOCUMENT CONTAINS CONFIDENTIAL
AND PROPRIETARY INFORMATION OF
SAMSUNG ELECTRONICS CO. LTD. PROPERTY.
DO NOT DISCLOSE TO OR DUPLICATE FOR OTHERS
EXCEPT AS AUTHORIZED BY SAMSUNG.

TRANSCEIVER (S5511)

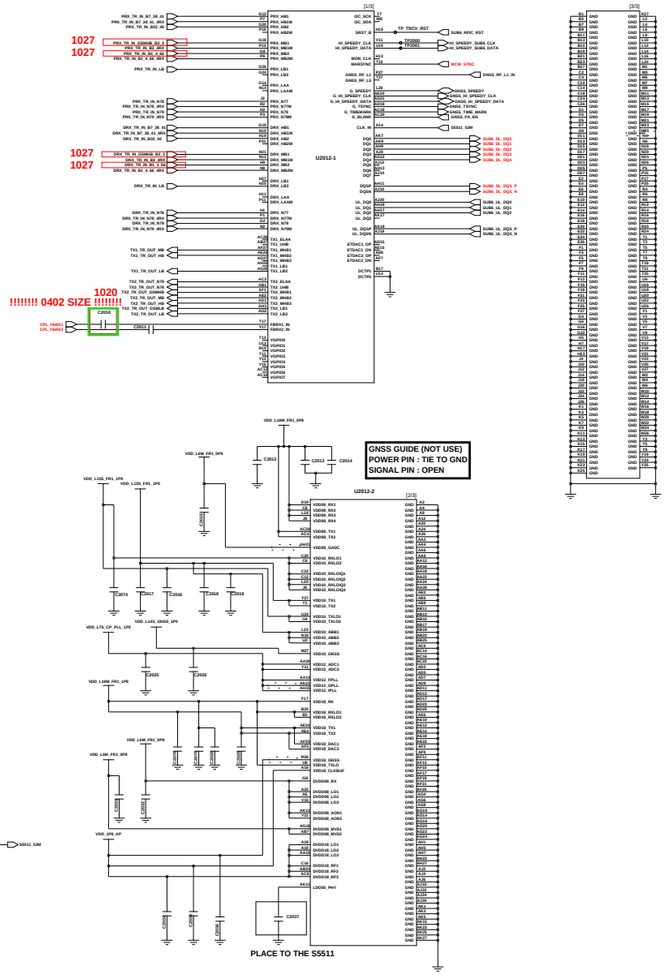

APT0

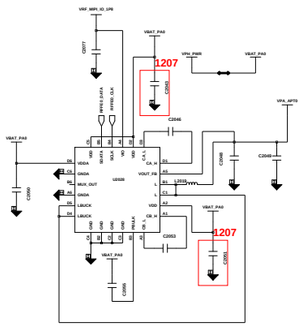

APT1

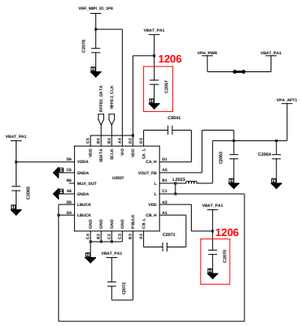

SUB ANT7
n78/79 PRX MIMO

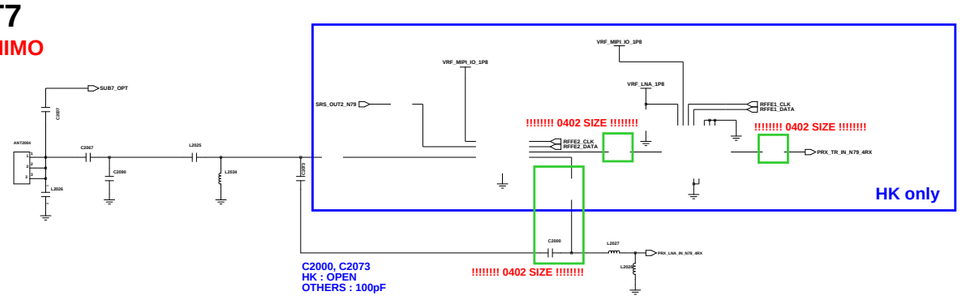

SUB ANT4
N78/79 TRX

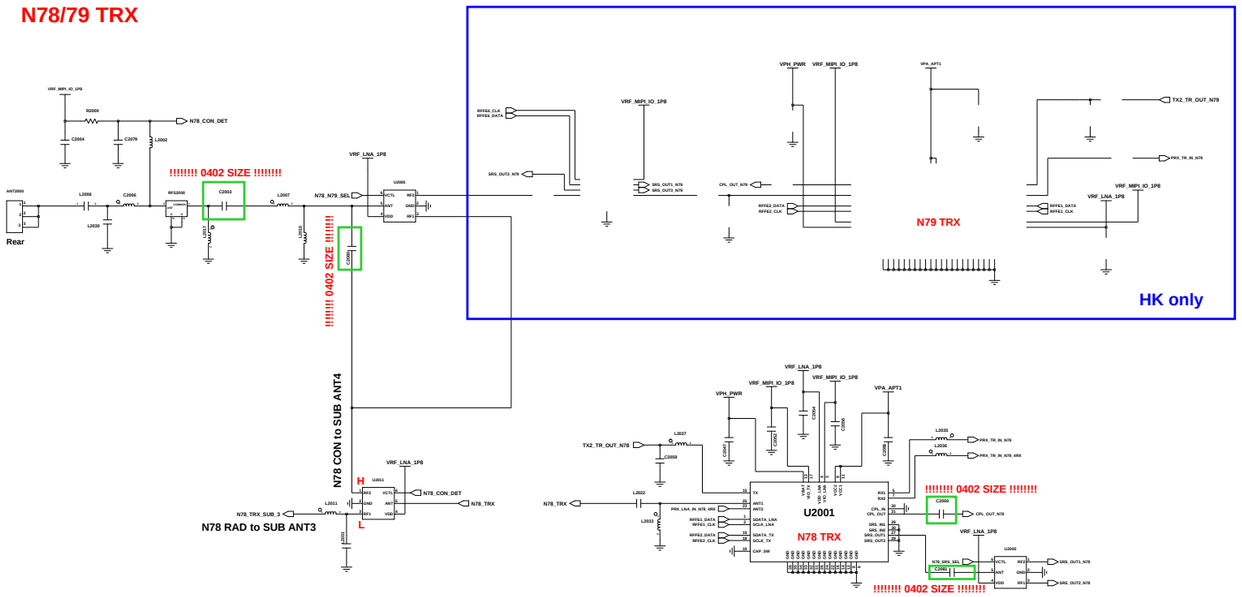

SUB ANT5
MHB MIMO

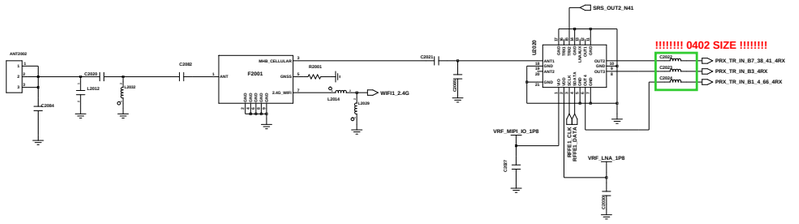

SUB ANT6
n78/79 DRX MIMO
MB MIMO

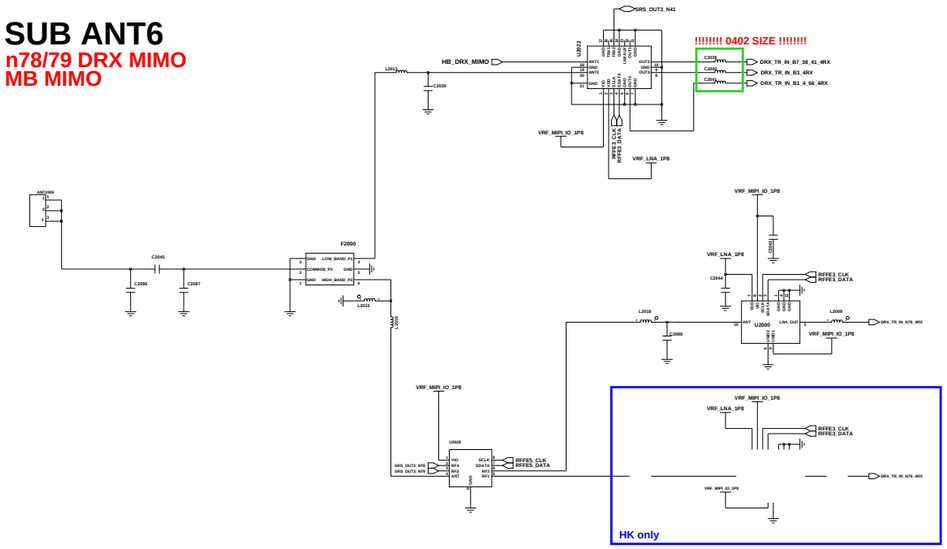

Engineer:	A33 5G
Initiator by:	
PA3 Crit.:	TITLE: RF TRCV/PAM/APT
DDI & FML Crit.:	
MFC VENDOR Crit.:	
QA Crit.:	Drawing Number:

Changed by	Date Changed	Time Changed

SAMSUNG CONFIDENTIAL
THIS DOCUMENT CONTAINS CONFIDENTIAL
PROPRIETARY INFORMATION THAT IS
SAMSUNG ELECTRONICS CO'S PROPERTY.
DO NOT DISCLOSE TO OR DUPLICATE FOR OTHERS
EXCEPT AS AUTHORIZED BY SAMSUNG.

WIFI/BT/FM

SUB ANT3

WiFi 5G, N78 TRX

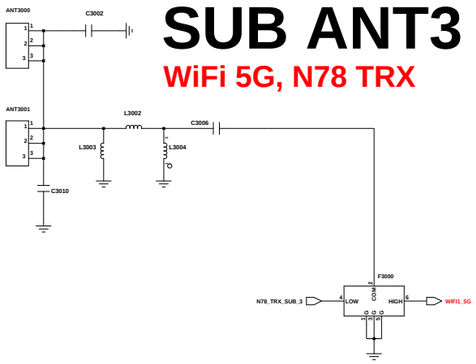

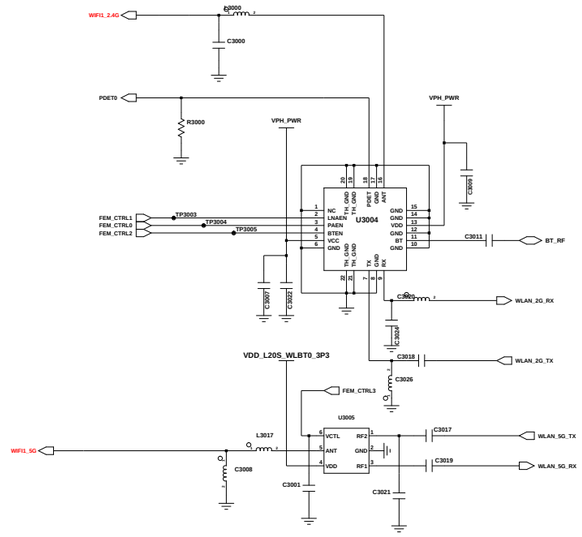

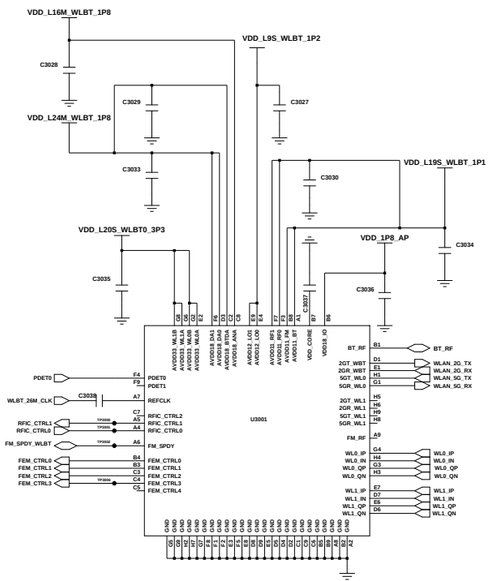

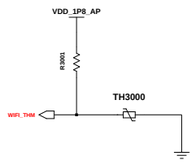

MST

use 106 internal function

GND CCP

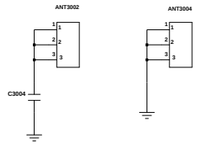

NFC

UICC ONLY / SWA not support

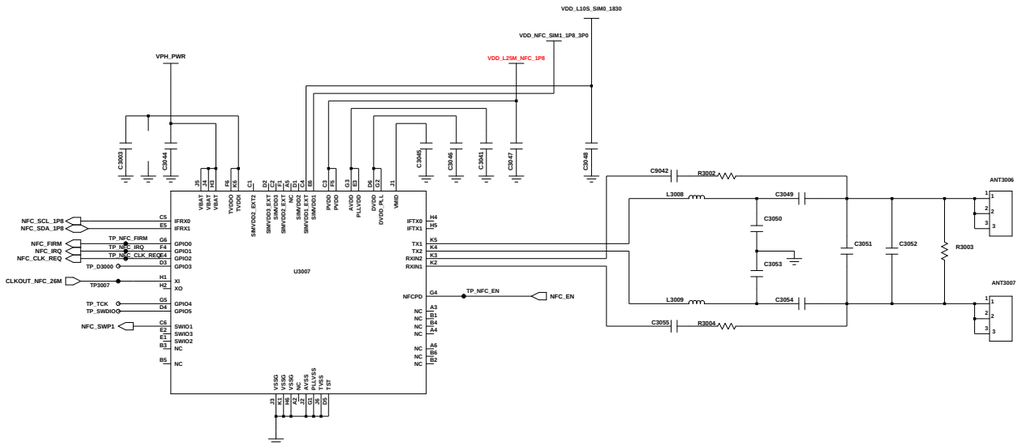

GPS L1 / GNSS/BEIDOU

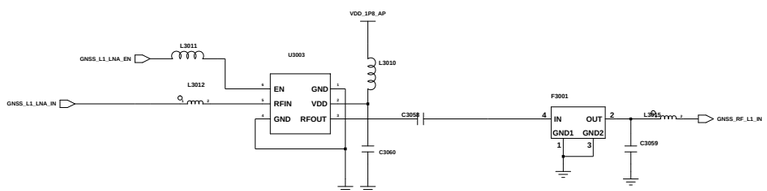

Engineer:	A33 5G		
Drawn by:			
R&D CHK:	TITLE: WIFI/NFC/MST/GPS	Size:	
DOC CTRL CHK:			
MFG ENGR CHK:			
QA CHK:	REV	Drawing Number:	Page: 3

Changed by: user118 | Date Changed: | Time Changed:

SAMSUNG CONFIDENTIAL
THIS DOCUMENT CONTAINS CONFIDENTIAL
AND PROPRIETARY INFORMATION OF
SAMSUNG ELECTRONICS CO'S PROPERTY.
DO NOT DISCLOSE TO OR DUPLICATE FOR OTHERS
EXCEPT AS AUTHORIZED BY SAMSUNG.

PAPAYA

UCP400-1

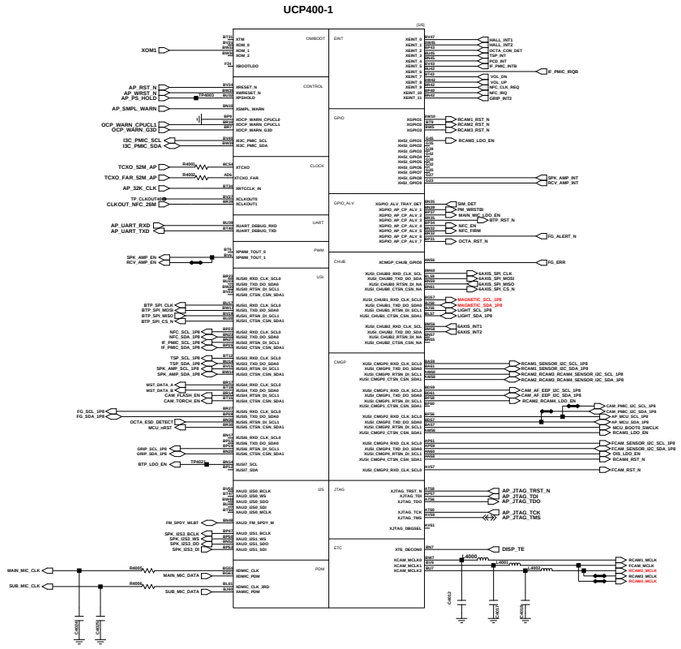

UCP400-2

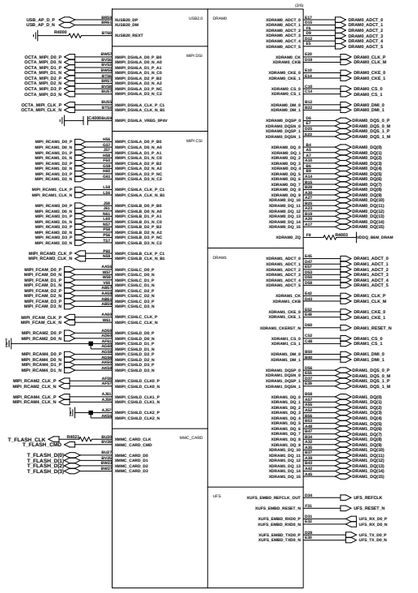

UCP400-3

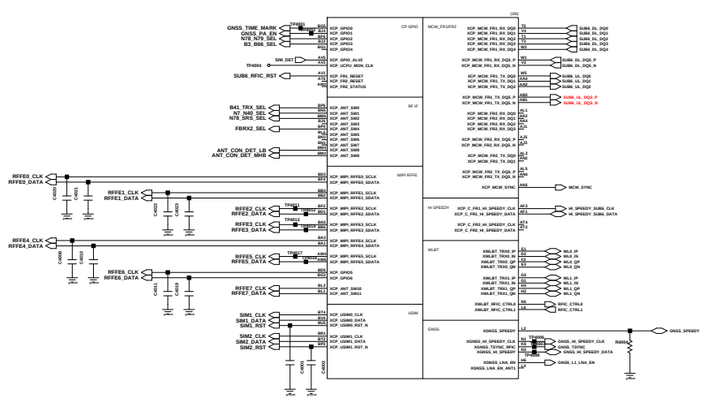

AP HW REV

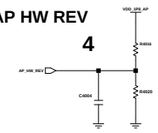

REV	R1(Kohm)	R2(Kohm)	AP	
0	NC	0	BRINGUP	
1	430	30	R00	
2	390	62	R01	
3	360	91	R02	
4	330	120	R03/R03A	1206
5	300	150		
6	270	180		
7	240	220		
8	200	240		
9	180	270		
10	160	300		
11	120	330		
12	91	360		
13	62	390		
14	30	430		
15	10	NC		

SYSTEM CLOCK

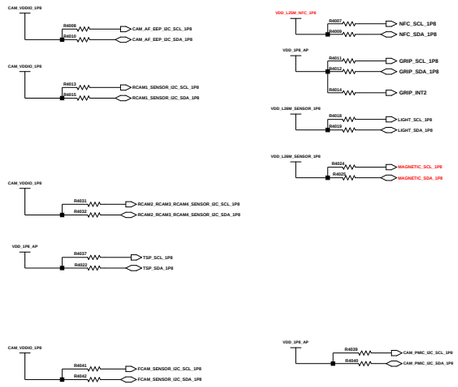

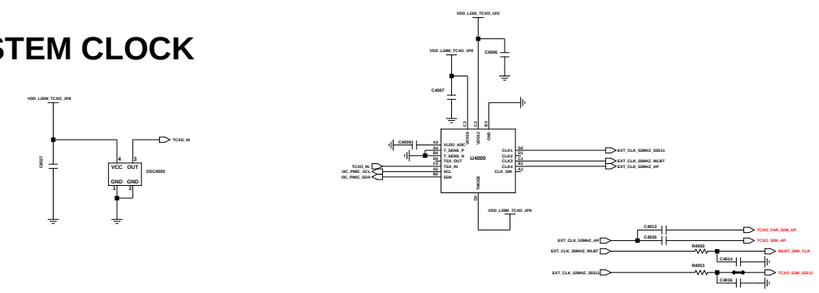

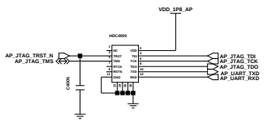

AP JTAG

PIN [3:1]	Function	
OM[2:0]	1st Boot	2nd Boot
000	UFS	USB
001	-----	USB
010	USB	-----
100	SD	USB

iROM BOOT

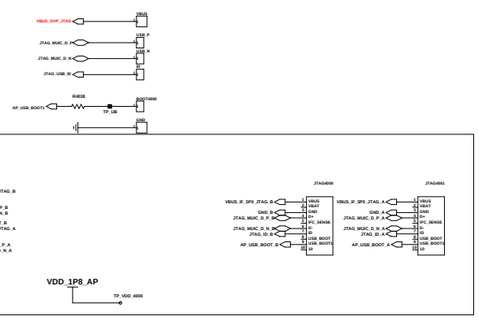

PCB JTAG

SAMSUNG CONFIDENTIAL
THIS DOCUMENT CONTAINS CONFIDENTIAL PROPRIETARY INFORMATION THAT IS SAMSUNG ELECTRONICS CO'S PROPERTY. DO NOT DISCLOSE TO OR DUPLICATE FOR OTHERS EXCEPT AS AUTHORIZED BY SAMSUNG.

UCP400-4

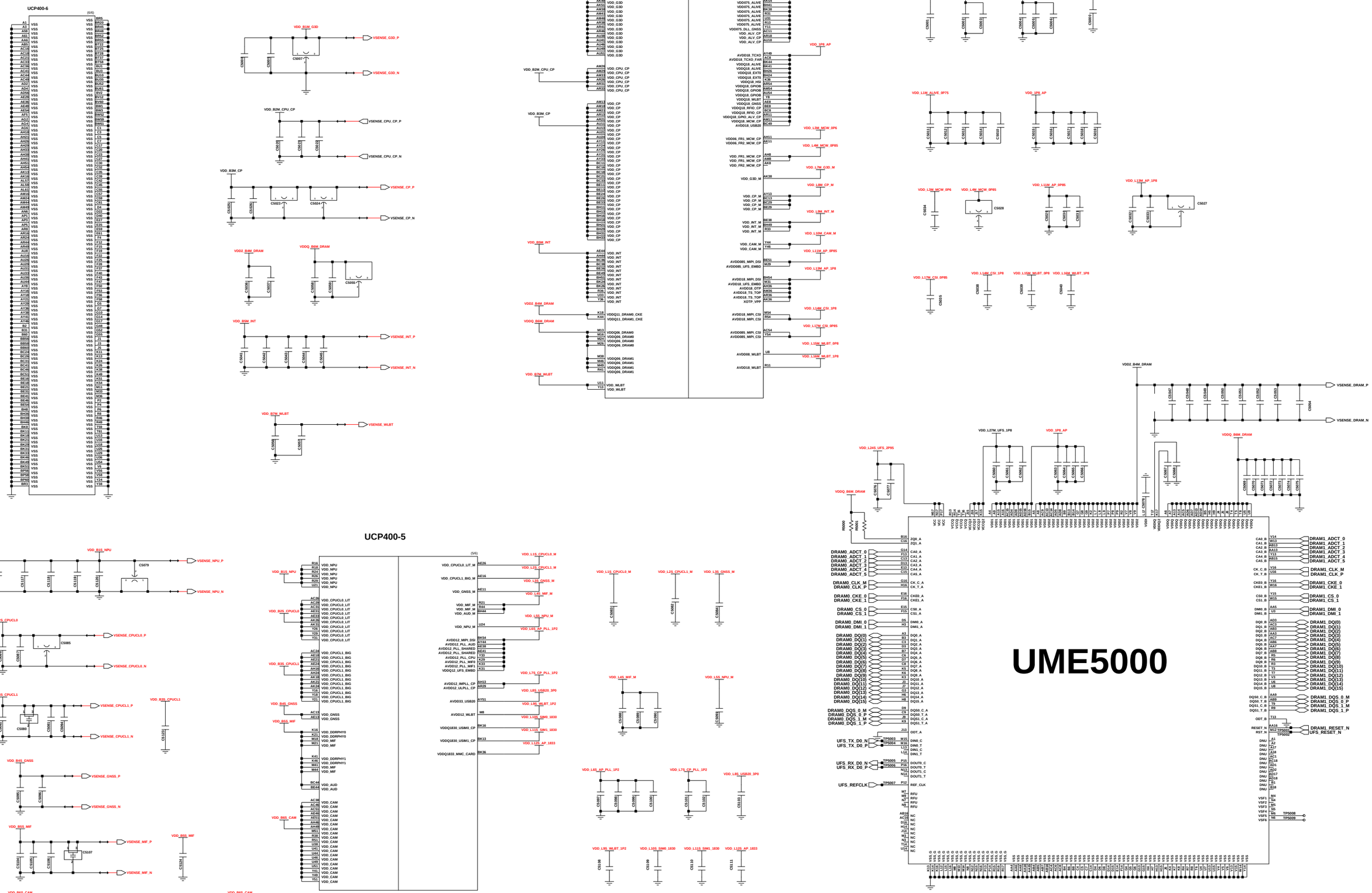

SAMSUNG CONFIDENTIAL
THIS DOCUMENT CONTAINS CONFIDENTIAL
AND PROPRIETARY INFORMATION OF
SAMSUNG ELECTRONICS CO'S PROPERTY.
DO NOT DISCLOSE TO OR DUPLICATE FOR OTHERS
EXCEPT AS AUTHORIZED BY SAMSUNG.

IF PMIC(S2MU106)

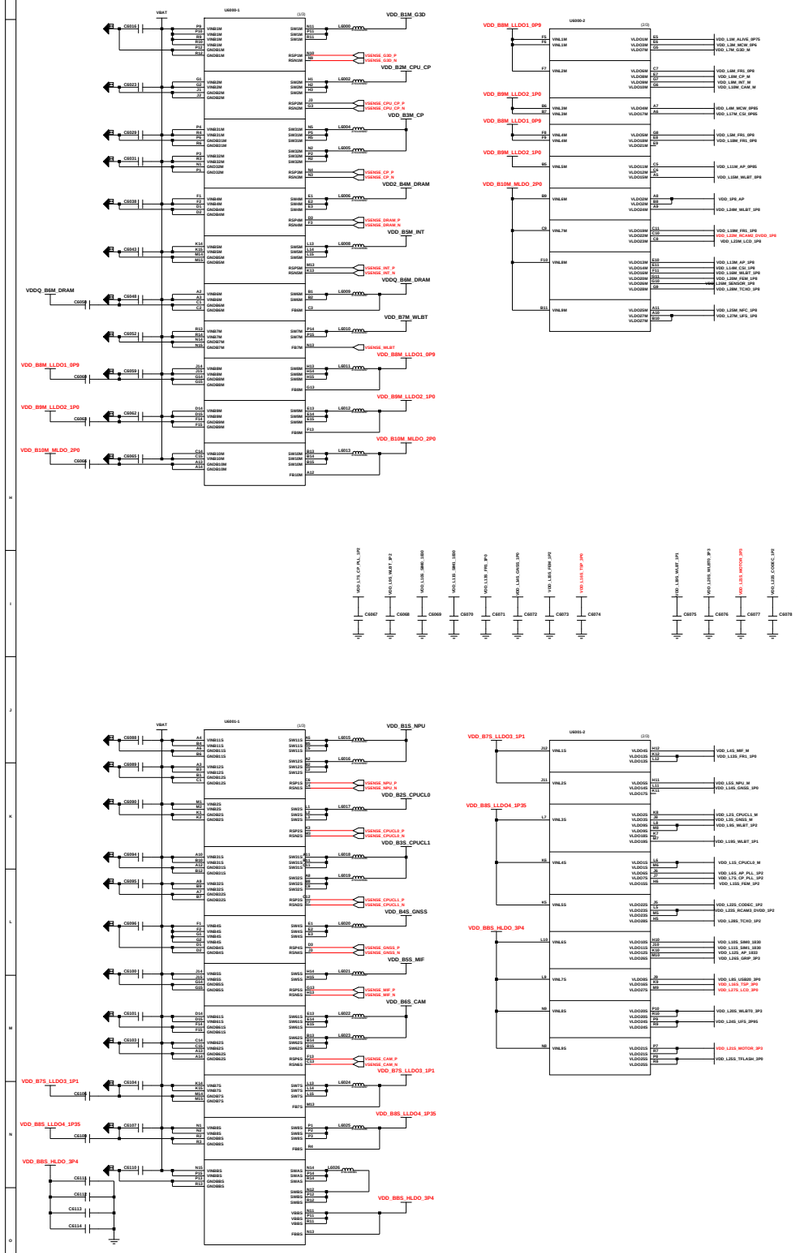

DIRECT CHARGER (SM5451)

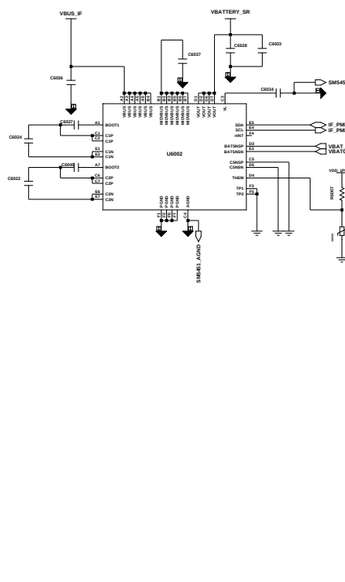

OVP

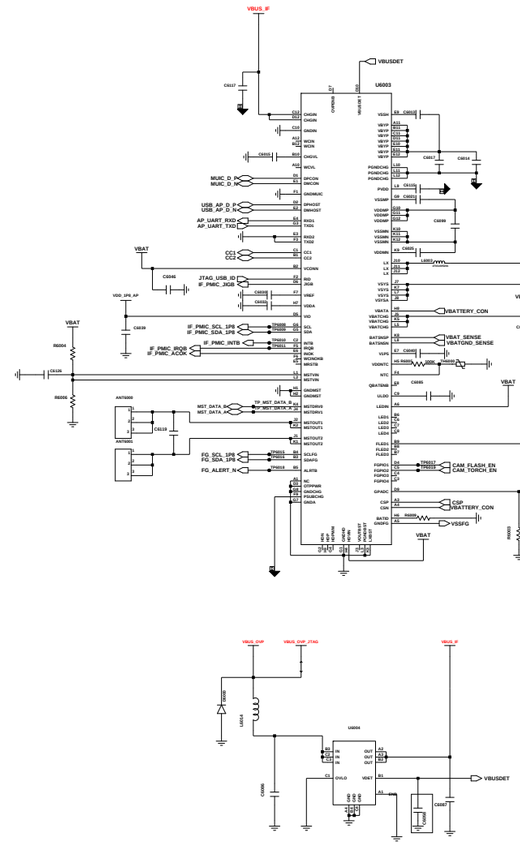

POWER & VOL KEY

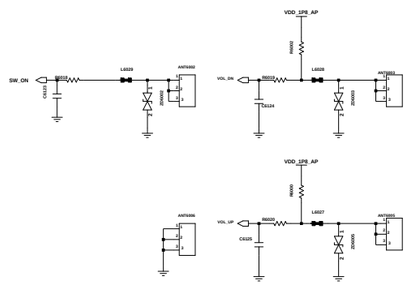

BATTERY CON

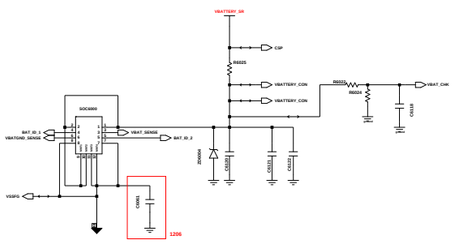

Engineer:	A33 5G
Drawn by:	
R&D CHK:	TITLE: POWER/MOT/KEY
SOC CTRL CHK:	
RFI SOCR CHK:	
QA CHK:	

Changed by | Date Changed | Time Changed | REV | Drawing Number

SAMSUNG CONFIDENTIAL
THIS DOCUMENT CONTAINS CONFIDENTIAL PROPRIETARY INFORMATION THAT IS SAMSUNG ELECTRONICS CO'S PROPERTY. DO NOT DISCLOSE TO OR DUPLICATE FOR OTHERS EXCEPT AS AUTHORIZED BY SAMSUNG.

AUDIO & SENSOR PART

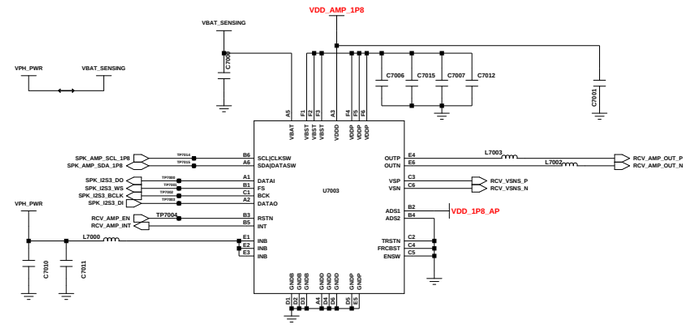

RCV AMP

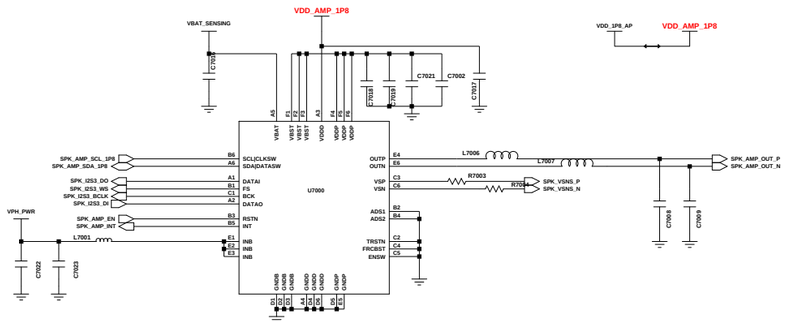

SPK AMP

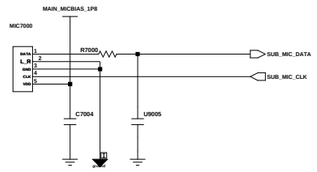

2nd MIC

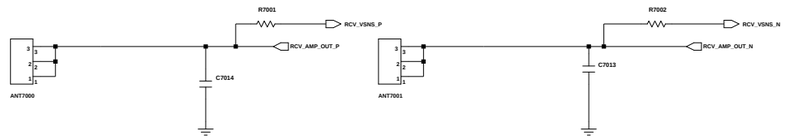

RCV CONTACT

DUAL SIM / T-FLASH (3in2)

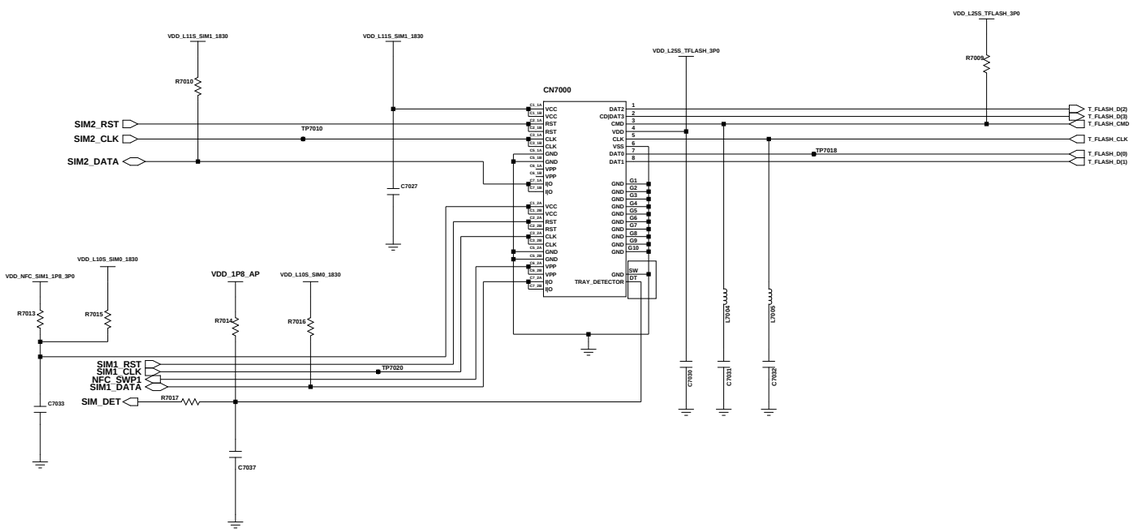

SENSOR

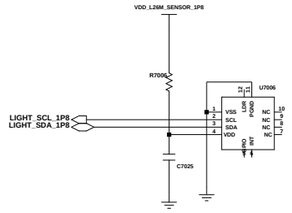

AMBIENT SENSOR

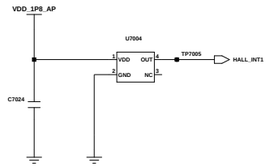

HALL IC

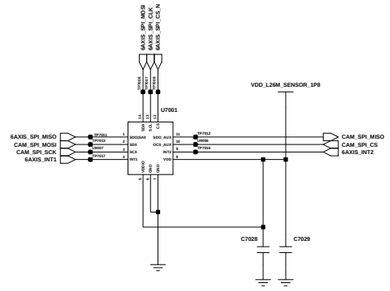

ACC&GYRO SENSOR

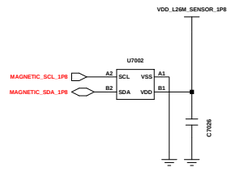

MAGNETIC SENSOR

Engineer:			
Drawn by:			
R&D CHK:	TITLE: A33 5G		Size:
DOC CTRL CHK:			
MFG ENGR CHK:			
QA CHK:	REV	Drawing Number:	Page:

Changed by: | Date Changed: | Time Changed:

SAMSUNG CONFIDENTIAL
THIS DOCUMENT CONTAINS CONFIDENTIAL
PROPRIETARY INFORMATION THAT IS
SAMSUNG ELECTRONICS CO'S PROPERTY.
DO NOT DISCLOSE TO OR DUPLICATE FOR OTHERS
EXCEPT AS AUTHORIZED BY SAMSUNG.

CAMERA

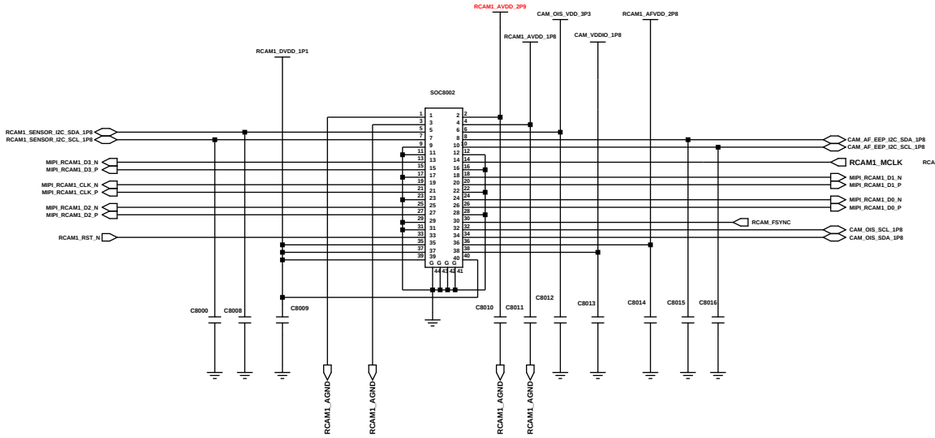

RCAM1_48M OIS(40PIN)

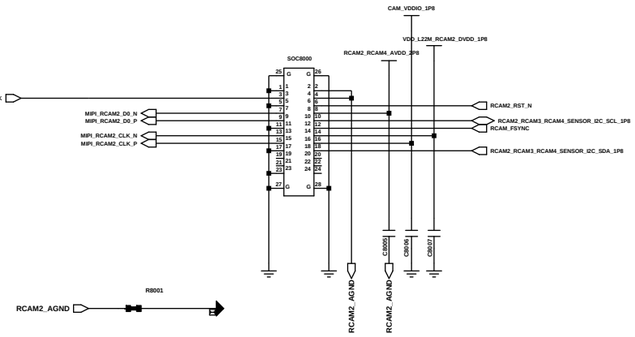

RCAM2_2M_BOKEH_CAMERA(24PIN)

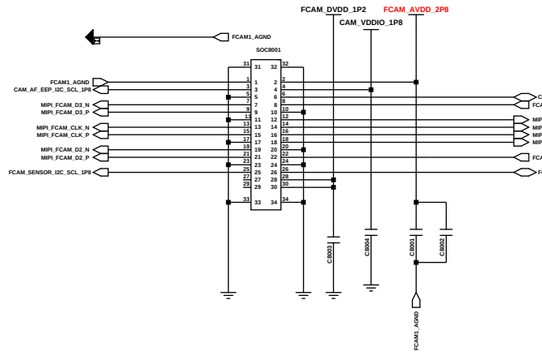

FRONT_13M CAMERA (30PIN)

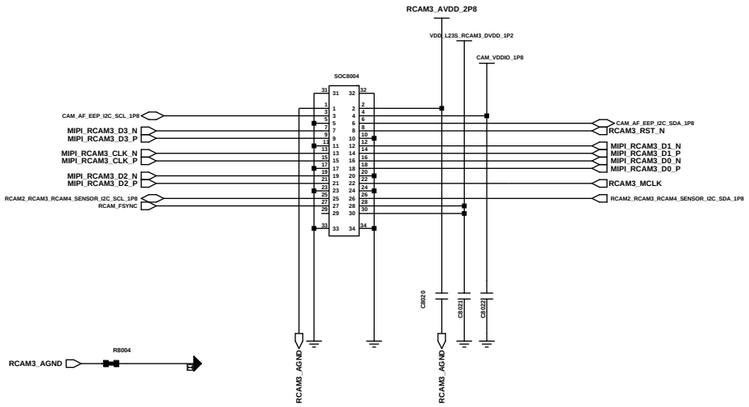

RCAM3_SUPER WIDE_8M CAMERA(30pin)

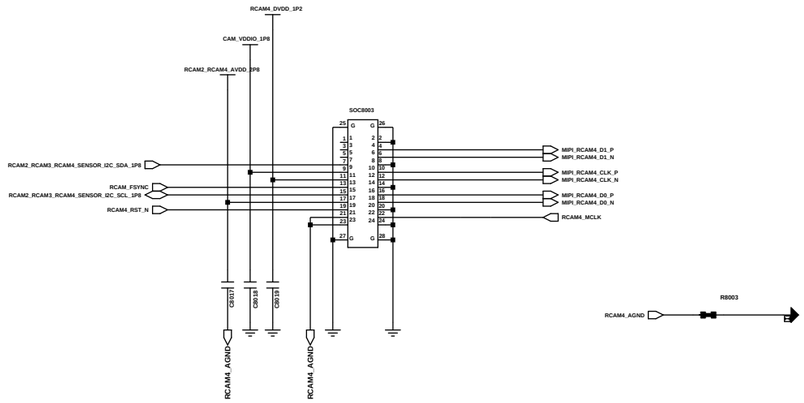

RCAM4_5M_MACRO_CAMERA(24PIN)

CAM PMIC

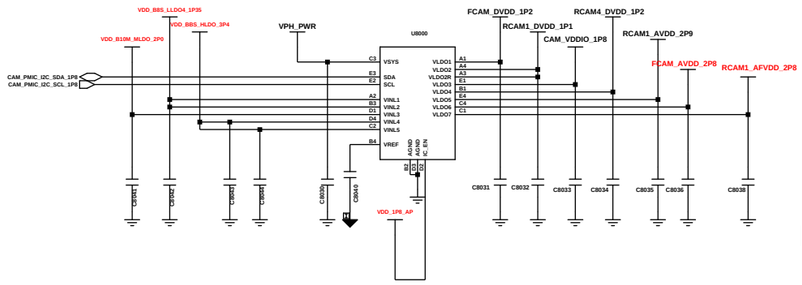

DECO CONTACT

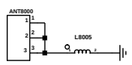

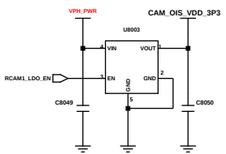

RCAM1_OIS

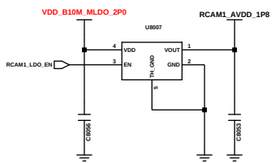

RCAM1_AVDD

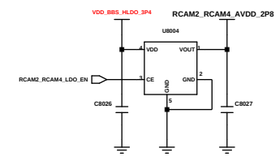

RCAM2_RCAM4_AVDD

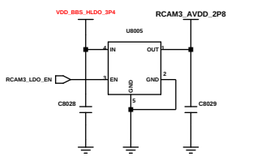

RCAM3_AVDD

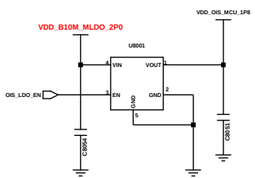

CAM MCU_DVDD

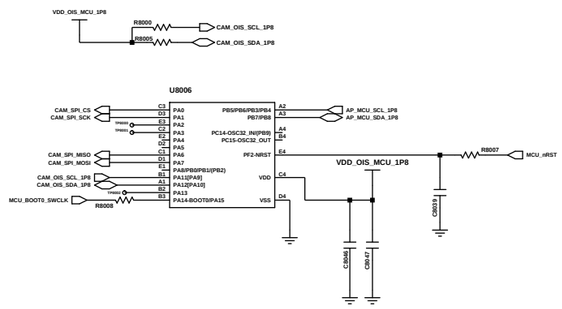

CAM MCU

Engineer:	A33 5G
Drawn by:	
R&D CHK:	TITLE: CAMERA
DOC CTRL CHK:	
MFG ENGR CHK:	
QA CHK:	Changed by: / Date Changed: / Time Changed: / REV / Drawing Number: / Page: 7/8

SAMSUNG CONFIDENTIAL
THIS DOCUMENT CONTAINS CONFIDENTIAL PROPRIETARY INFORMATION THAT IS SAMSUNG ELECTRONICS CO'S PROPERTY. DO NOT DISCLOSE TO OR DUPLICATE FOR OTHERS EXCEPT AS AUTHORIZED BY SAMSUNG.

C2C (Conn to Conn FPCB)

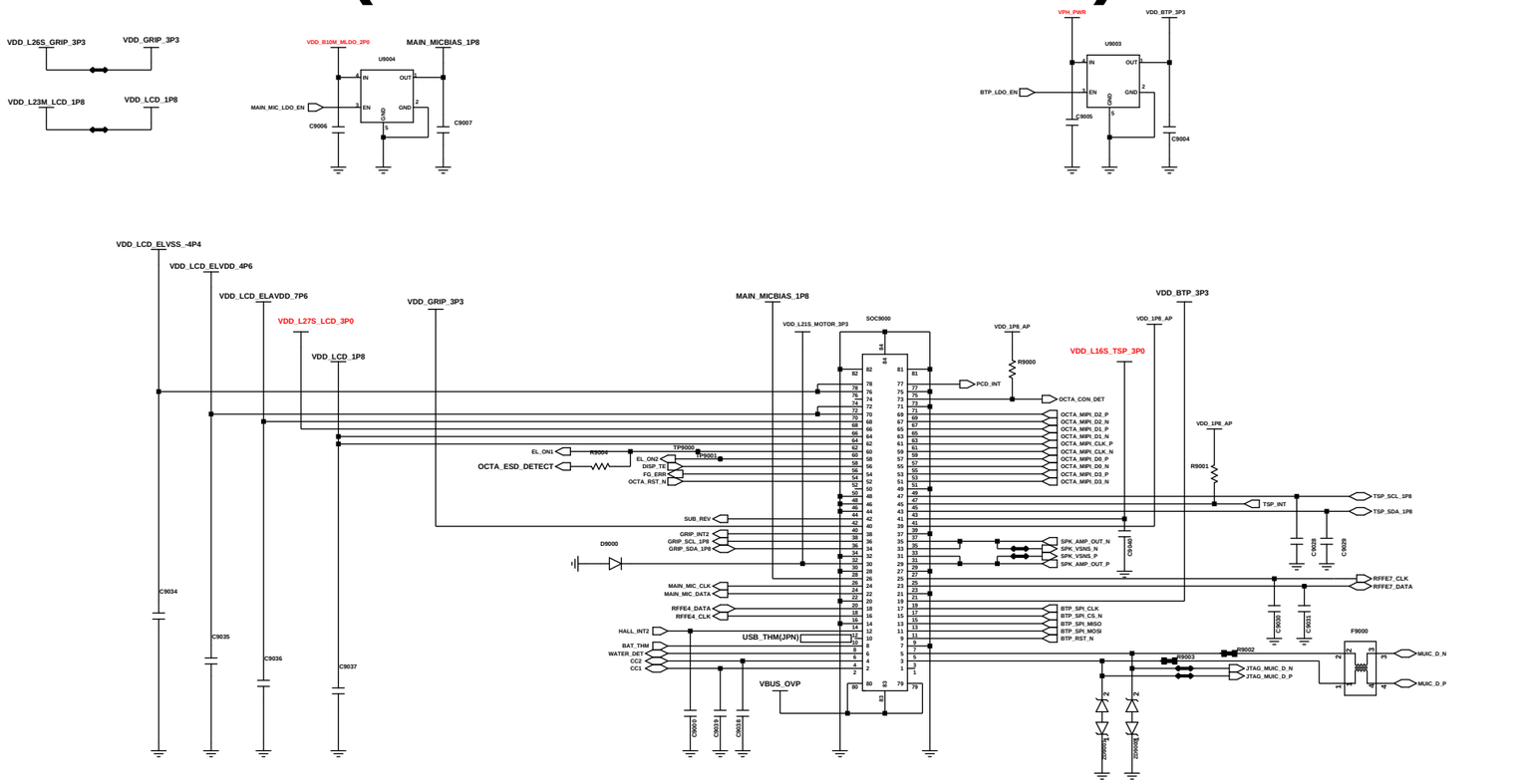

BOTH HOLE

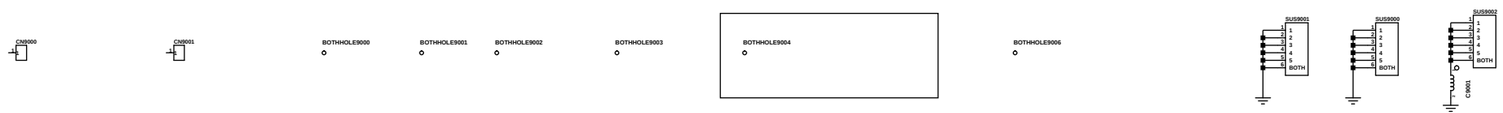

SHIELD CAN

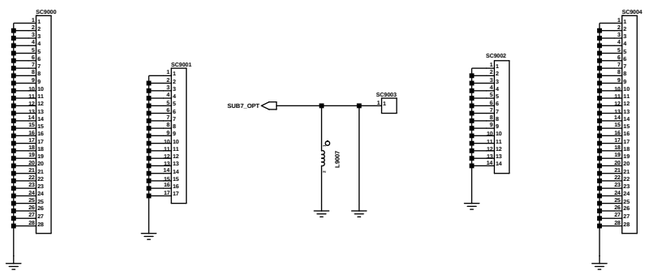

REGION		MEMORY		
R9013	B : EUR	R9017 NC	4/128	
R9014 NC	0 : HK	R9018	6/128	
R9015 NC	N : KOR	R9019 NC	8/128	
R9016 NC	E : SEA, MEA			
R9010 NC	S : SWA			
R9011 NC	M : LA			

DISPLAY

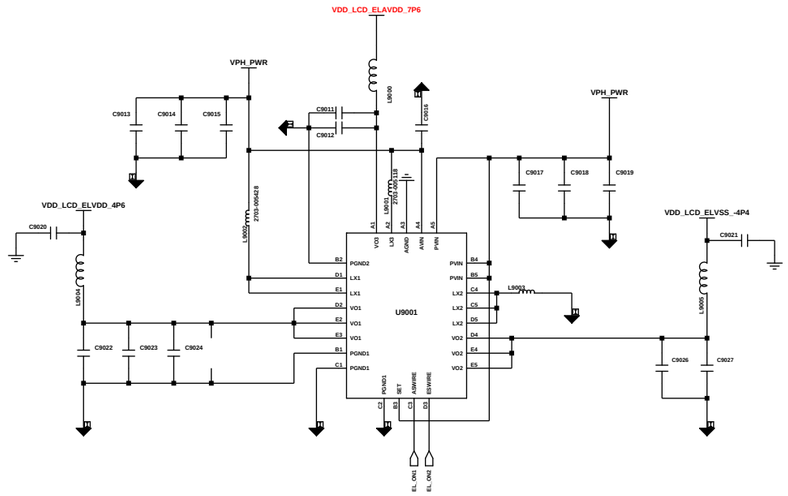

DISPLAY PMIC

Engineer:	A33 5G
Drawn by:	
R&D CHK:	TITLE: Display
DOC CTRL CHK:	
MFG ENGR CHK:	
QA CHK:	REV: Drawing Number: Page:

Changed by: user28 | Date Changed: Thursday, June 18, 2015 | Time Changed: 10:18:28 am

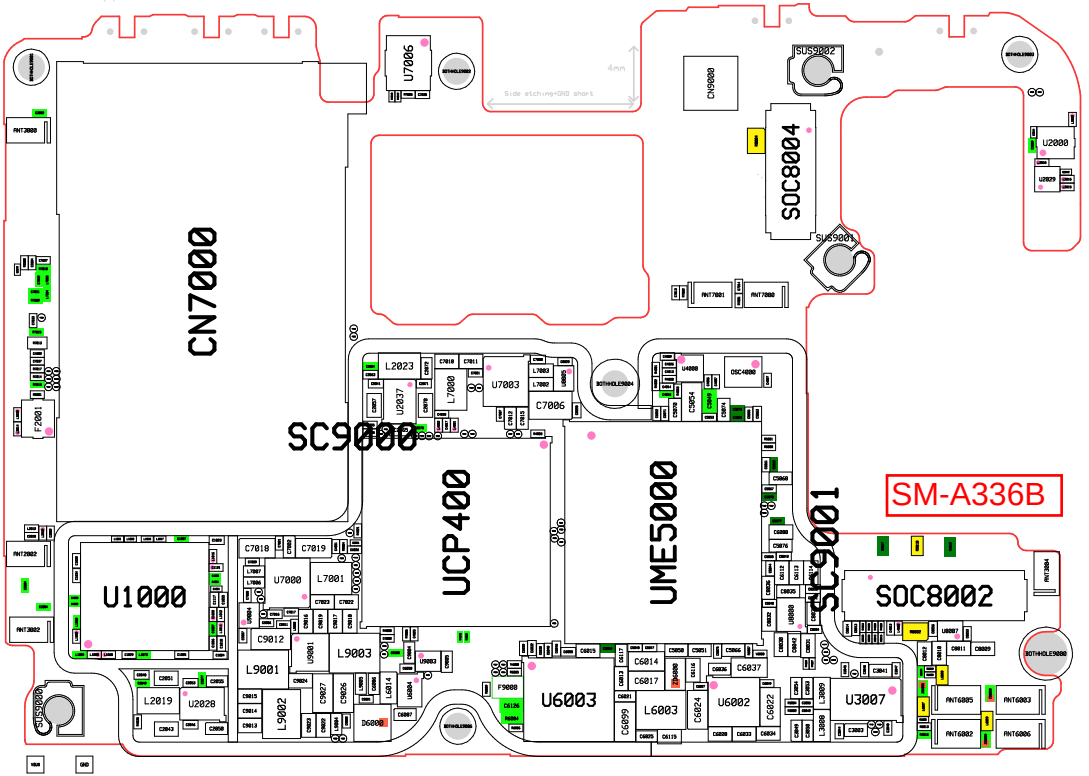
SM-A336B
CN7000
SC9000
UCP400
UME5000
SC9001
SOC8004
SOC8002
U1000
U7006
U7003
U7000
U6003
U6002
U3007
U2000
U2029
U2028
U2037
U2019
L2023
L7000
L7001
L9001
L9002
L9003
L6003
C7006
C7018
C7019
C9012
C6014
C6017
C6037
C6824
C6899
C6125
F9000
D6000
CN9000
SUS9002
SUS9001
SUS9000
ANT2000
ANT2001
ANT2002
ANT2004
ANT7001
ANT7000
ANT6005
ANT6003
ANT6002
ANT6006
F2001
OSC4000
U4000
C2054
C2061
C2060
C6876
C6877
C6878
C6879
C6880
C6881
C6882
C6883
C6884
C6885
C6886
C6887
C6888
C6889
C6890
C6891
C6892
C6893
C6894
C6895
C6896
C6897
C6898
C6899
C6900
C6901
C6902
C6903
C6904
C6905
C6906
C6907
C6908
C6909
C6910
C6911
C6912
C6913
C6914
C6915

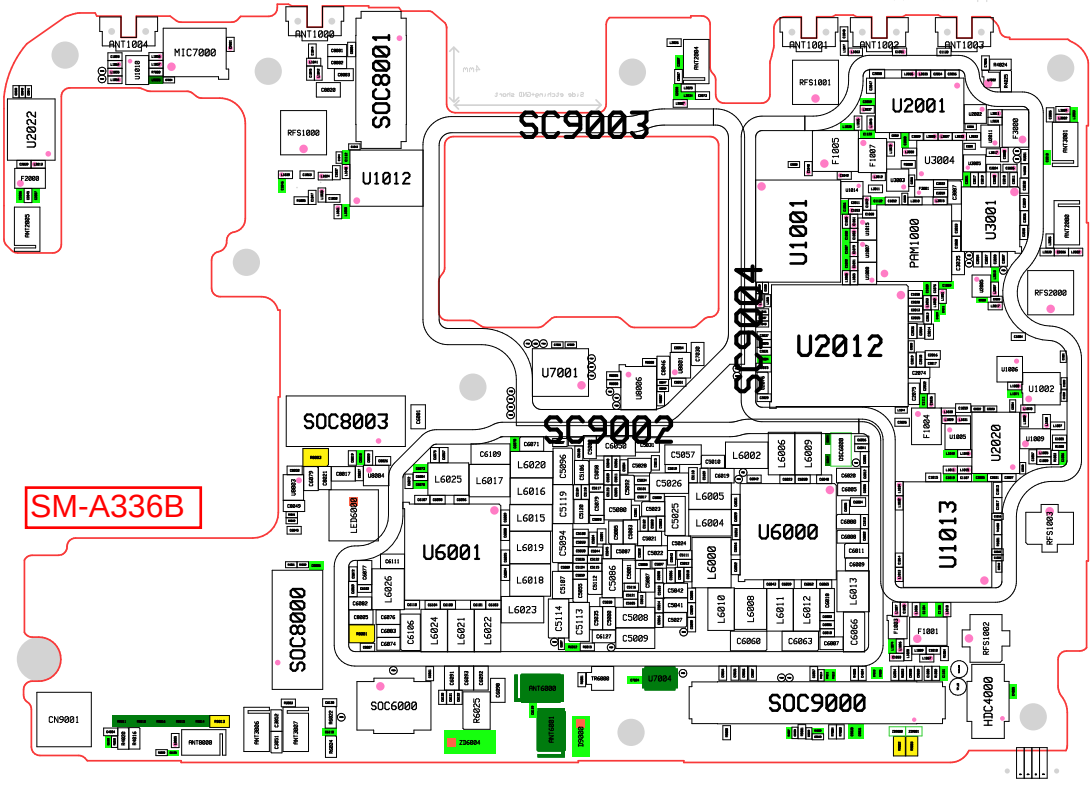
SM-A336B
SC9003
SC9004
SC9002
SOC8001
SOC8003
SOC8000
SOC6000
SOC9000
U1012
U2022
U2001
U1001
U3001
U2012
U7001
U6001
U6000
U1013
U2020
U1002
U3004
PAM1000
MIC7000
ANT1004
ANT1000
ANT1001
ANT1002
ANT1003
RFS1001
RFS1000
RFS2000
RFS1002
F2000
F1005
F1007
F1004
F1001
F3000
CN9001
HDC4000
RS025
U7004

SAMSUNG CONFIDENTIAL
THIS DOCUMENT CONTAINS CONFIDENTIAL
PROPRIETARY INFORMATION THAT IS
SAMSUNG ELECTRONICS CO'S PROPERTY.
DO NOT DISCLOSE TO OR DUPLICATE FOR OTHERS
EXCEPT AS AUTHORIZED BY SAMSUNG.

A33 5G REV0.3A

SM-A336E_SEA/MEA
Common

2021.12.06

Sheet01 : GSM / WCDMA / LTE / NR(N41) RF
Sheet02 : TRANSCEIVER, SUB ANT
Sheet03 : CONNECTIVITY(BT/WIFI/FM), NFC
Sheet04 : AP(PAPAYA-INTERFACE,GPIO)
Sheet05 : AP(POWER), MEM(uMCP)
Sheet06 : PMIC/SUB PMIC, IF PMIC
Sheet07 : AUDIO Codec, SENSOR, SIM, SD
Sheet08 : CAMERA
Sheet09 : DISPLAY PMIC, C2C

SAMSUNG CONFIDENTIAL
THIS DOCUMENT CONTAINS CONFIDENTIAL
AND PROPRIETARY INFORMATION OF
SAMSUNG ELECTRONICS CO. LTD. PROPERTY.
DO NOT DISCLOSE TO OR DUPLICATE FOR OTHERS
EXCEPT AS AUTHORIZED BY SAMSUNG.

RF PART 1

MAIN ANT1 LB

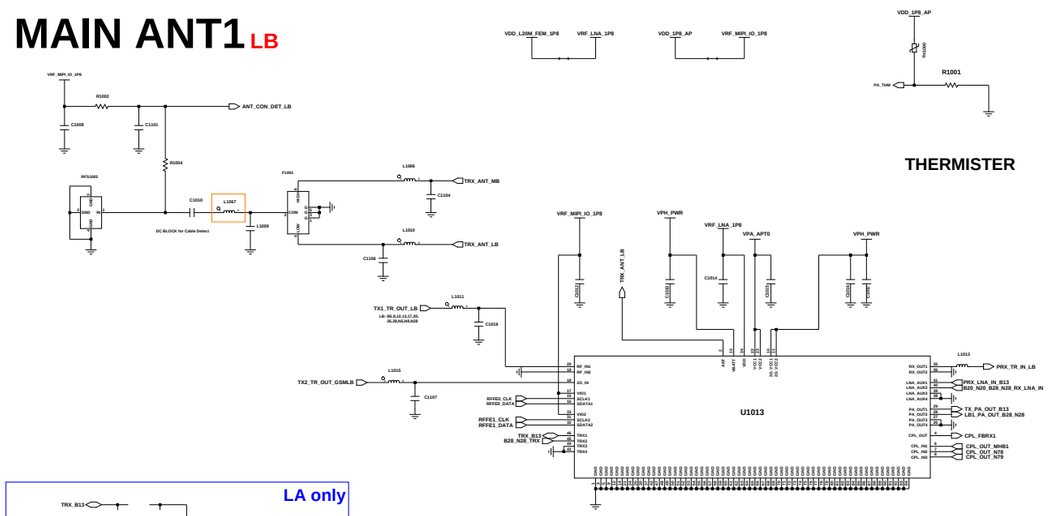

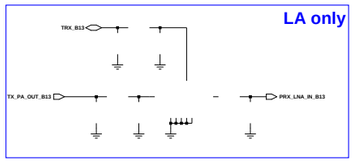

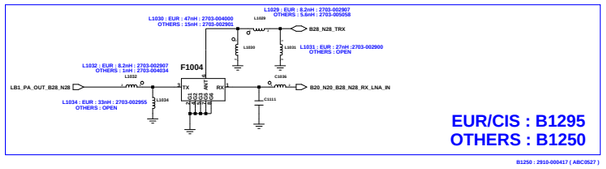

MAIN ANT2

MHB, n78/79 DRX

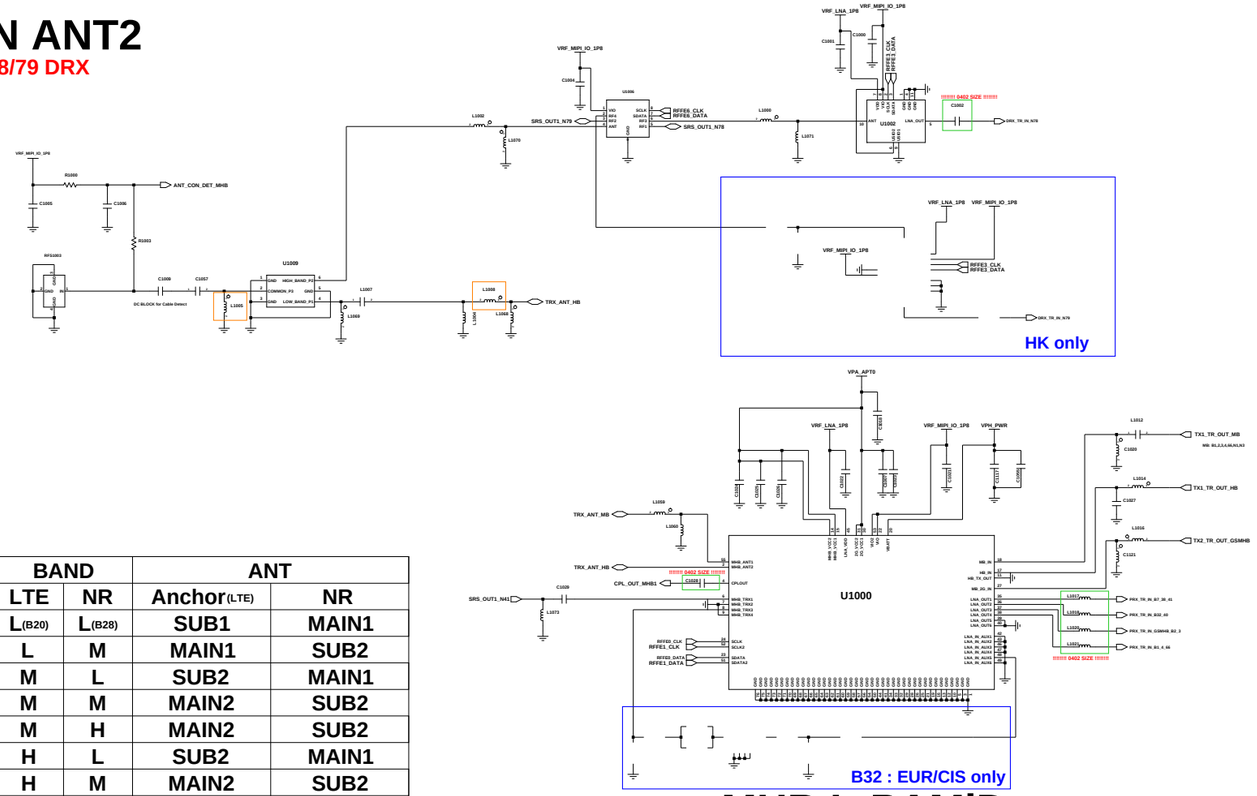

BAND		ANT	
LTE	NR	Anchor(LTE)	NR
L(B20)	L(B28)	SUB1	MAIN1
L	M	MAIN1	SUB2
M	L	SUB2	MAIN1
M	M	MAIN2	SUB2
M	H	MAIN2	SUB2
H	L	SUB2	MAIN1
H	M	MAIN2	SUB2
L/M/H	UHB	MAIN	SUB

SUB ANT1

LB
HB MIMO

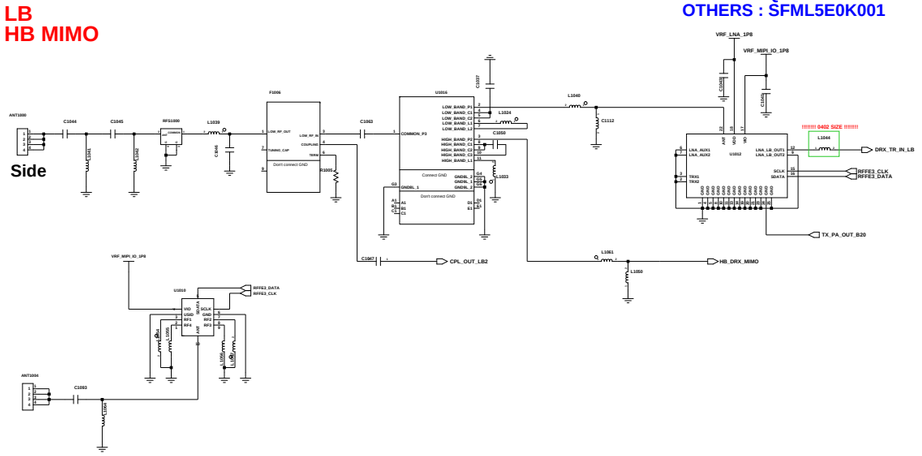

SUB ANT2

GPS, MHB, WiFi 2.4G

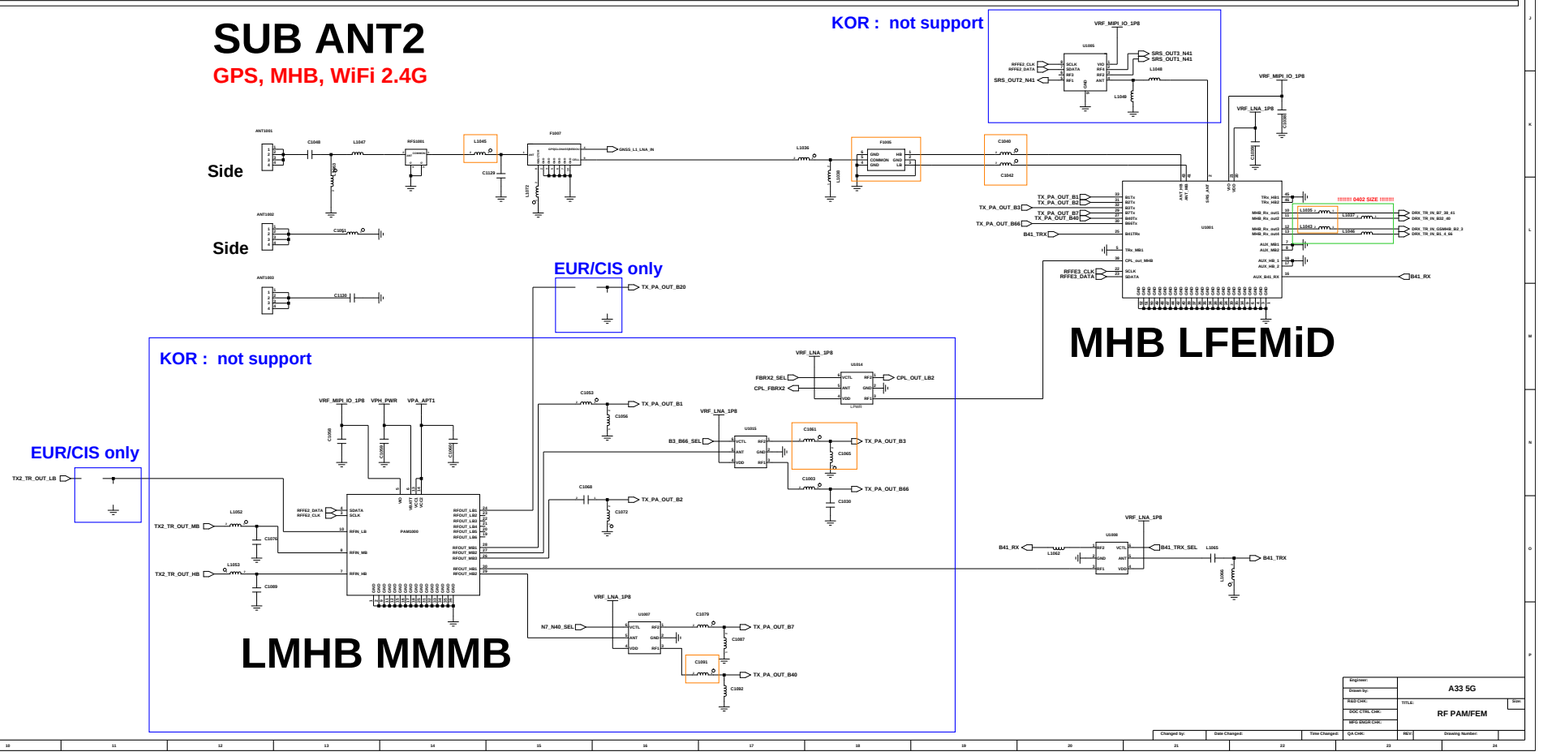

SAMSUNG CONFIDENTIAL
THIS DOCUMENT CONTAINS CONFIDENTIAL
AND PROPRIETARY INFORMATION OF
SAMSUNG ELECTRONICS CO. LTD. PROPERTY.
DO NOT DISCLOSE TO OR DUPLICATE FOR OTHERS
EXCEPT AS AUTHORIZED BY SAMSUNG.

TRANSCEIVER (S5511)

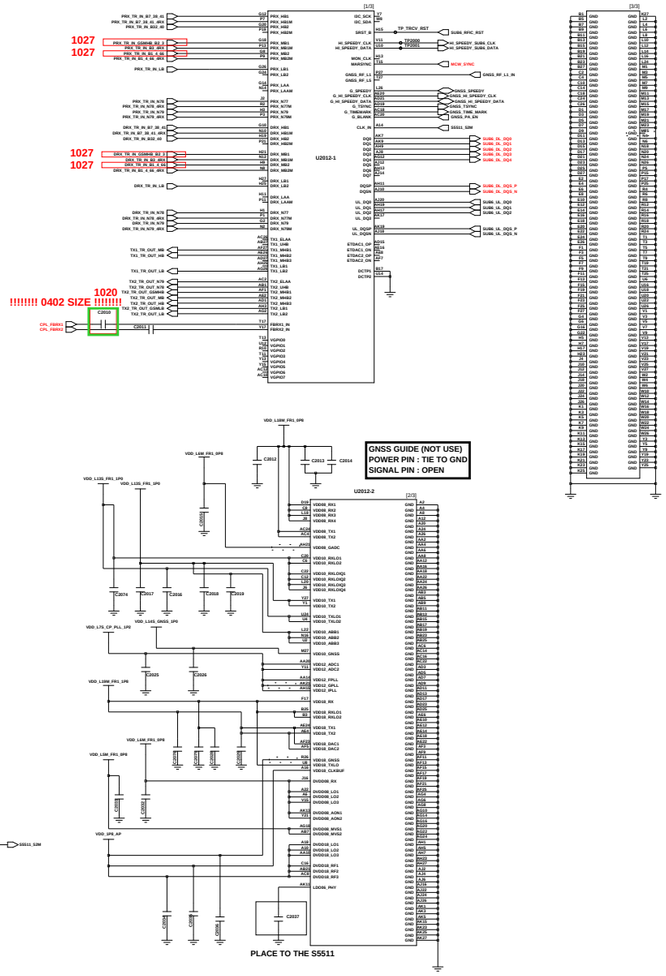

APT0

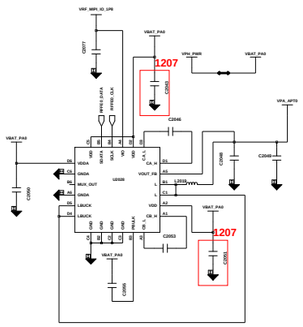

APT1

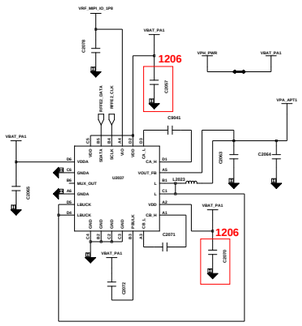

SUB ANT7
n78/79 PRX MIMO

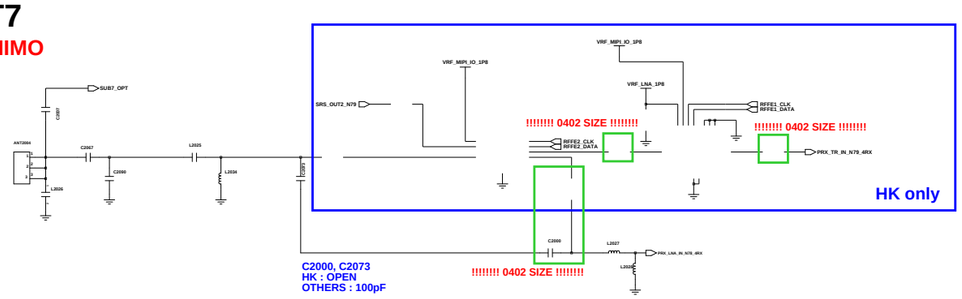

SUB ANT4
N78/79 TRX

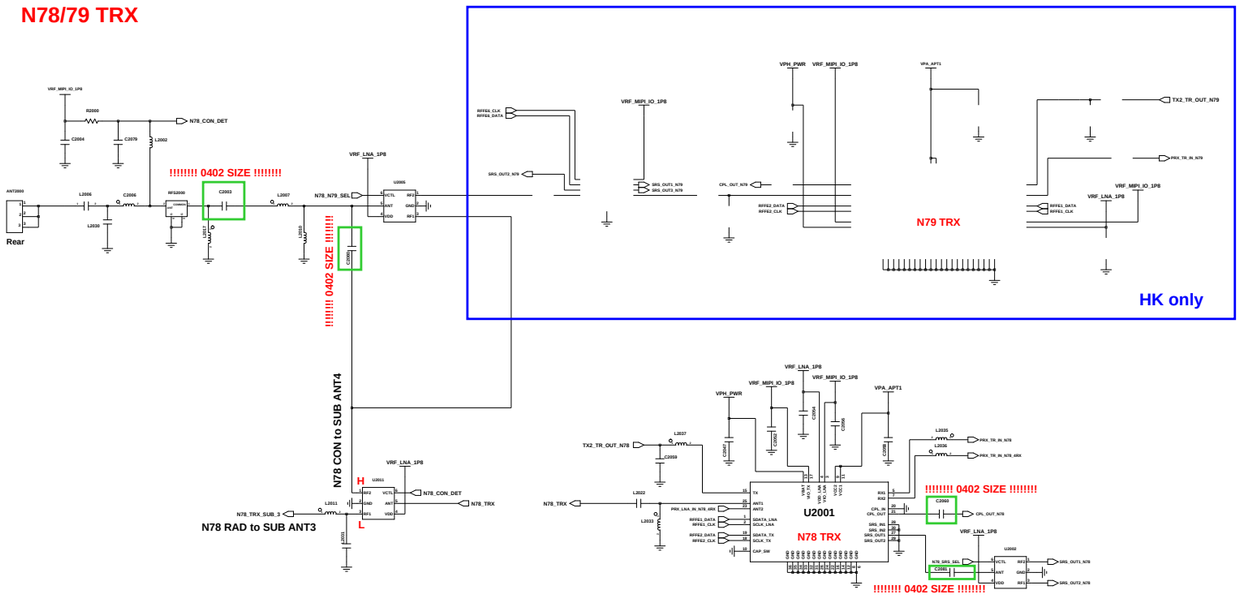

SUB ANT5
MHB MIMO

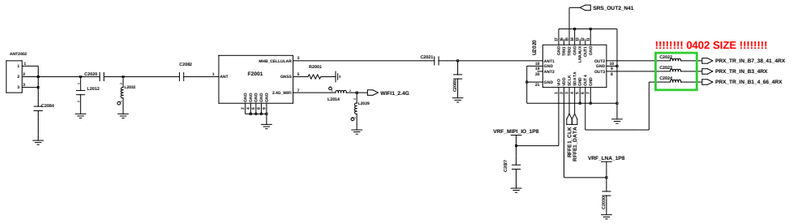

SUB ANT6
n78/79 DRX MIMO
MB MIMO

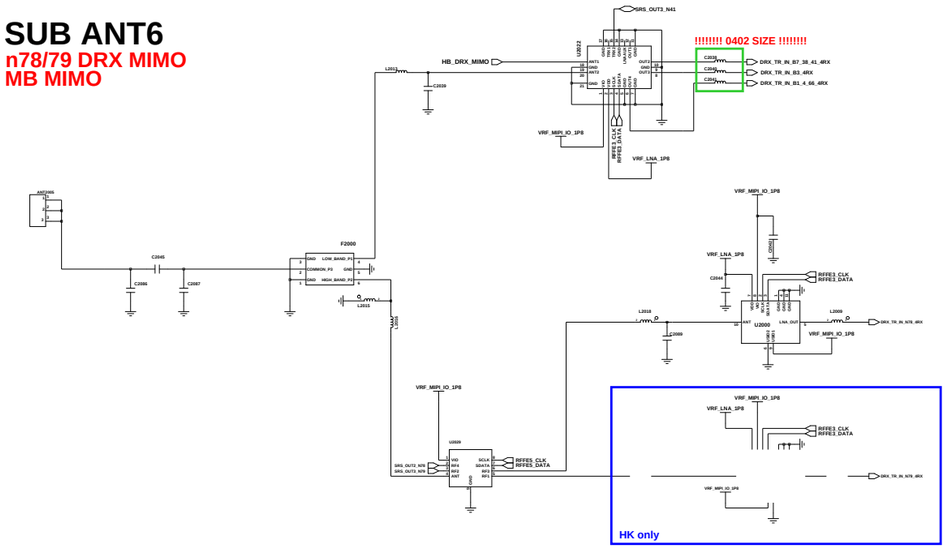

Engineer:	A33 5G
Initiator by:	
PA3 Crit.:	TITLE: RF TRCV/PAM/APT
DDI & FML Crit.:	
MFC VENDOR Crit.:	
QA Crit.:	Drawing Number:

Changed by	Date Changed	Time Changed

SAMSUNG CONFIDENTIAL
THIS DOCUMENT CONTAINS CONFIDENTIAL
PROPRIETARY INFORMATION THAT IS
SAMSUNG ELECTRONICS CO'S PROPERTY.
DO NOT DISCLOSE TO OR DUPLICATE FOR OTHERS
EXCEPT AS AUTHORIZED BY SAMSUNG.

WIFI/BT/FM

SUB ANT3

WiFi 5G, N78 TRX

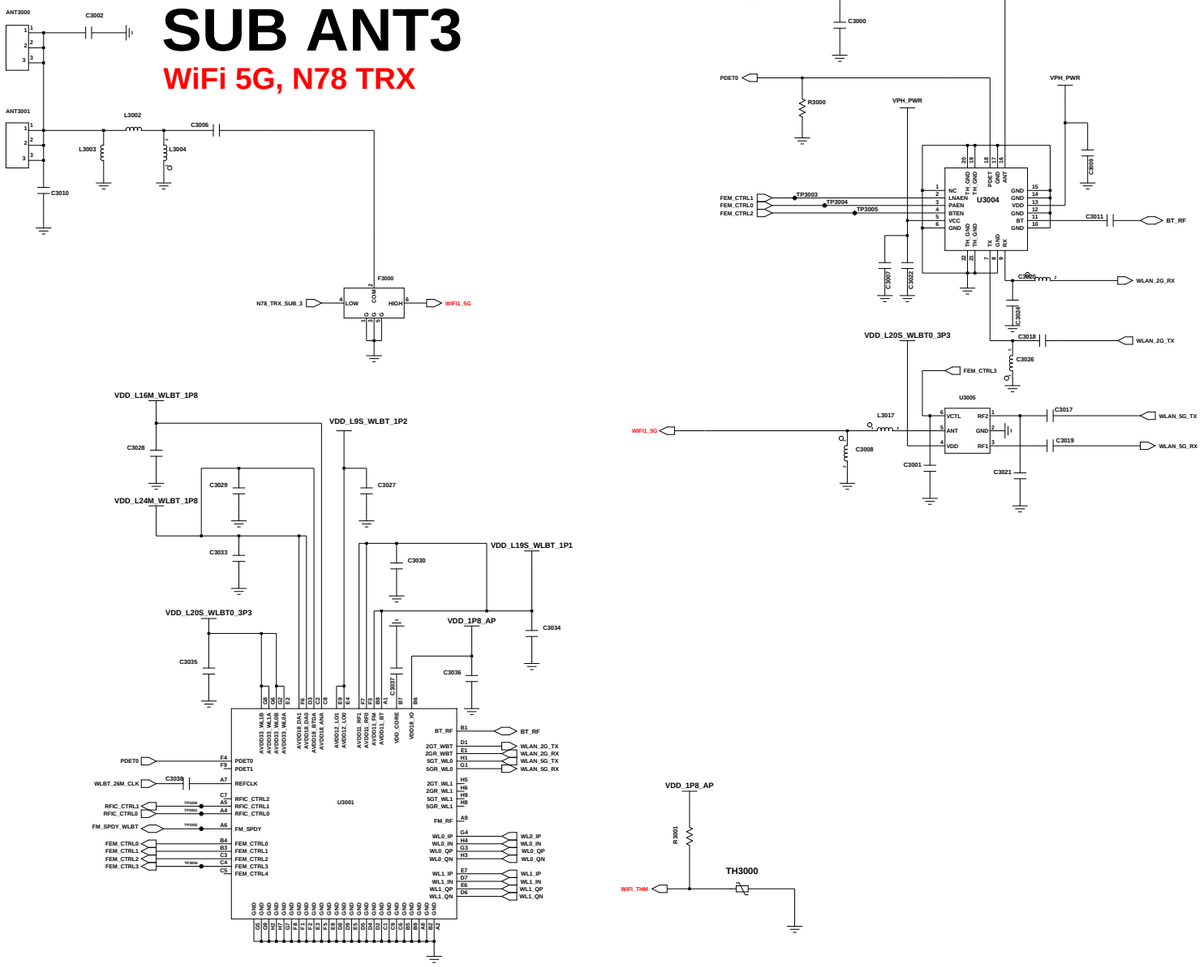

MST

use 106 internal function

GND CCP

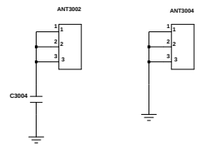

NFC

UICC ONLY / SWA not support

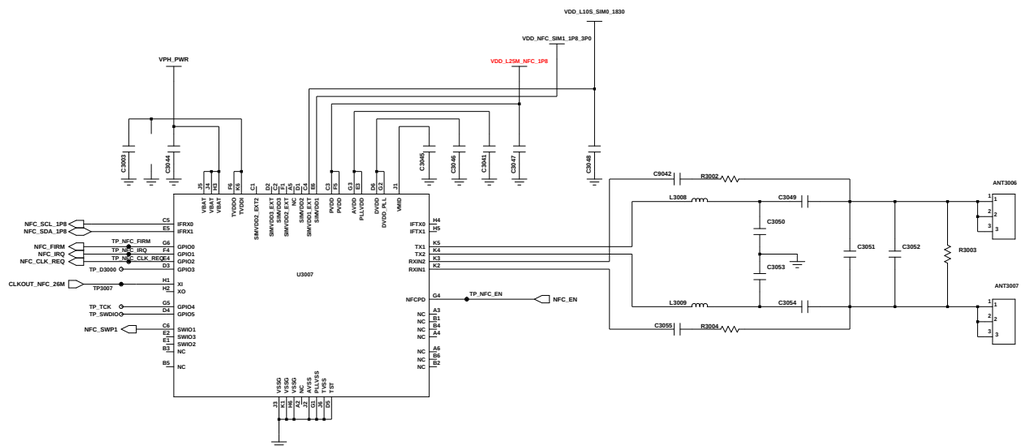

GPS L1 / GNSS/BEIDOU

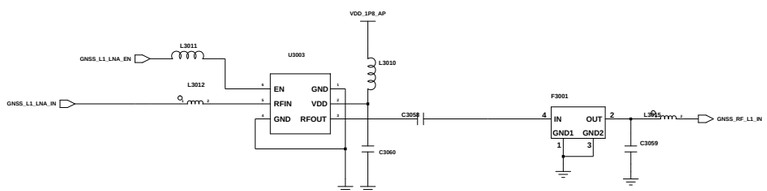

Engineer:			
Drawn by:	A33 5G		
R&D CHK:	TITLE:	Size:	
DOC CTRL CHK:	WIFI/NFC/MST/GPS		
MFG ENGR CHK:			
QA CHK:	REV	Drawing Number:	Page: 3

Changed by: user118 | Date Changed: | Time Changed:

SAMSUNG CONFIDENTIAL
THIS DOCUMENT CONTAINS CONFIDENTIAL
AND PROPRIETARY INFORMATION OF
SAMSUNG ELECTRONICS CO'S PROPERTY.
DO NOT DISCLOSE TO OR DUPLICATE FOR OTHERS
EXCEPT AS AUTHORIZED BY SAMSUNG.

PAPAYA

UCP400-1

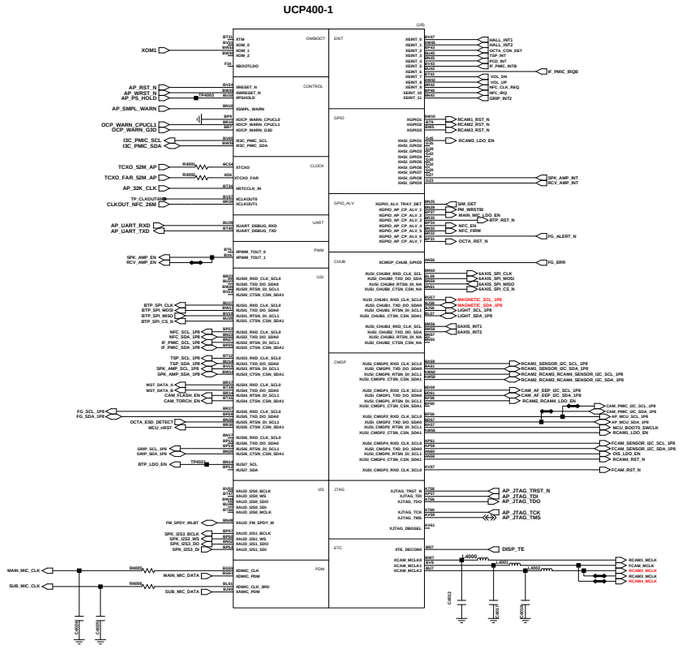

UCP400-2

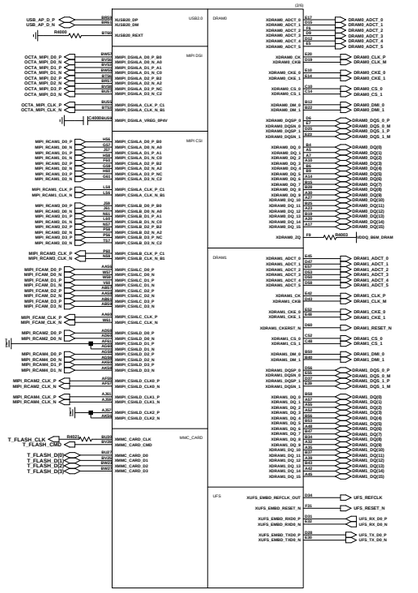

UCP400-3

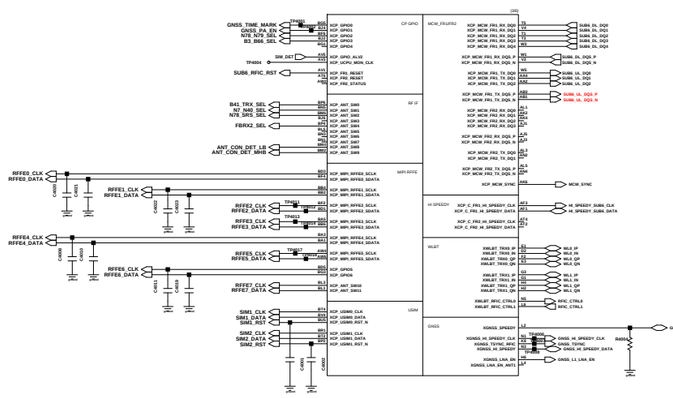

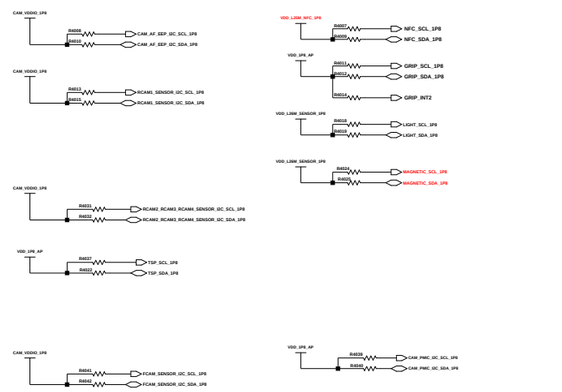

AP HW REV

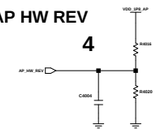

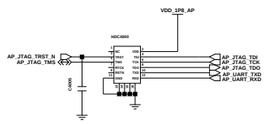

AP JTAG

PIN [3:1]	Function	
OM[2:0]	1st Boot	2nd Boot
000	UFS	USB
001	-----	USB
010	USB	-----
100	SD	USB

iROM BOOT

REV	R1(Kohm)	R2(Kohm)	AP	
0	NC	0	BRINGUP	
1	430	30	R00	
2	390	62	R01	
3	360	91	R02	
4	330	120	R03/R03A	1206
5	300	150		
6	270	180		
7	240	220		
8	200	240		
9	180	270		
10	160	300		
11	120	330		
12	91	360		
13	62	390		
14	30	430		
15	10	NC		

SYSTEM CLOCK

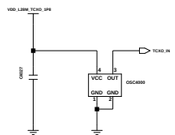

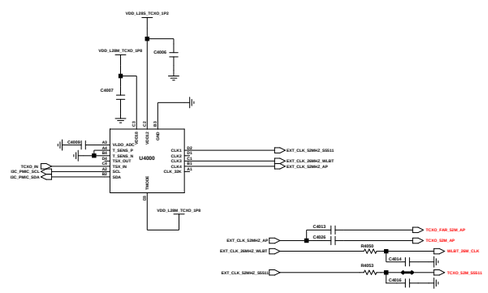

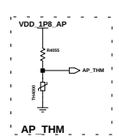

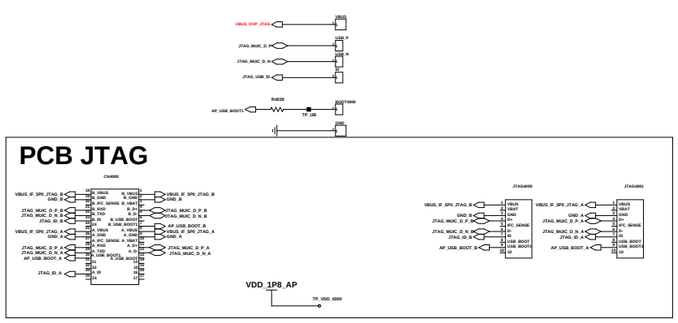

PCB JTAG

Engineer:	A33 5G
Hardware Kyo	
Software Kyo	
ASIC DVM:	TITLE:
DOC CTRL CHK:	2020_100916
MFG DOCR CHK:	
QA CHK:	BOM:
	ECO:
	Drawing Number:
	Page:

Changed by	Date Changed	Time Changed
	Friday, September 18, 2020	7:45:31 PM

SAMSUNG CONFIDENTIAL
THIS DOCUMENT CONTAINS CONFIDENTIAL PROPRIETARY INFORMATION THAT IS SAMSUNG ELECTRONICS CO'S PROPERTY. DO NOT DISCLOSE TO OR DUPLICATE FOR OTHERS EXCEPT AS AUTHORIZED BY SAMSUNG.

UCP400-4

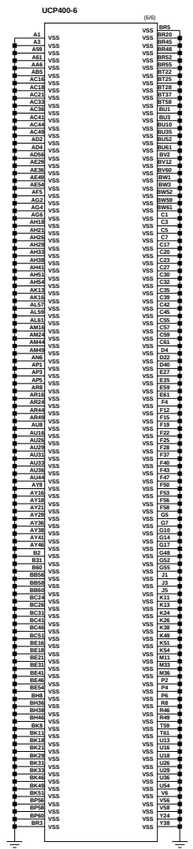

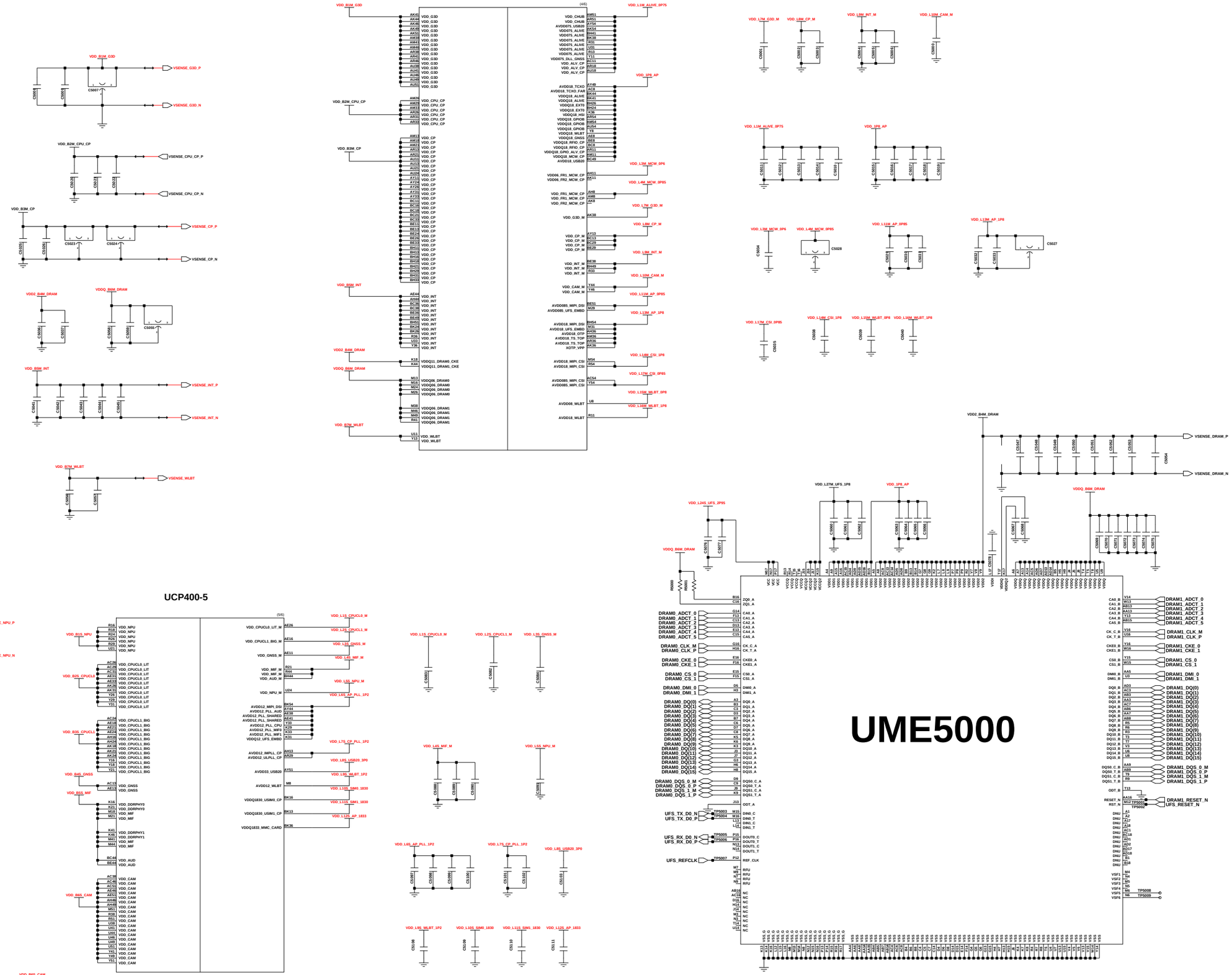

UCP400-5

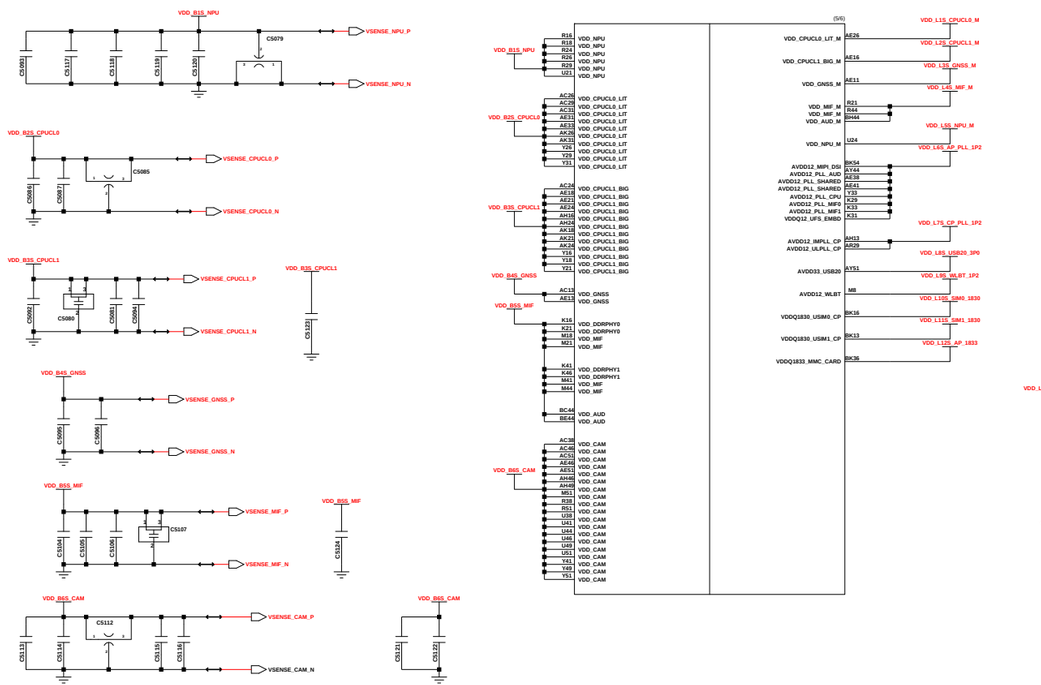

UME5000

6GB + 128GB uMCP

4GB + 128GB uMCP : 1108-000713
6GB + 128GB uMCP : 1108-000714
8GB + 128GB uMCP : 1108-000721

Engineer:	A33 5G		
Drawn by:			
R&D CHK:	TITLE: AP/CP/uMCP	Size:	
DOC CTRL CHK:			
MFG ENGR CHK:			
Changed by:	Date Changed:	Time Changed:	QA CHK:
REV	Drawing Number:	Page:	

SAMSUNG CONFIDENTIAL
THIS DOCUMENT CONTAINS CONFIDENTIAL
AND PROPRIETARY INFORMATION OF
SAMSUNG ELECTRONICS CO'S PROPERTY.
DO NOT DISCLOSE TO OR DUPLICATE FOR OTHERS
EXCEPT AS AUTHORIZED BY SAMSUNG.

IF PMIC(S2MU106)

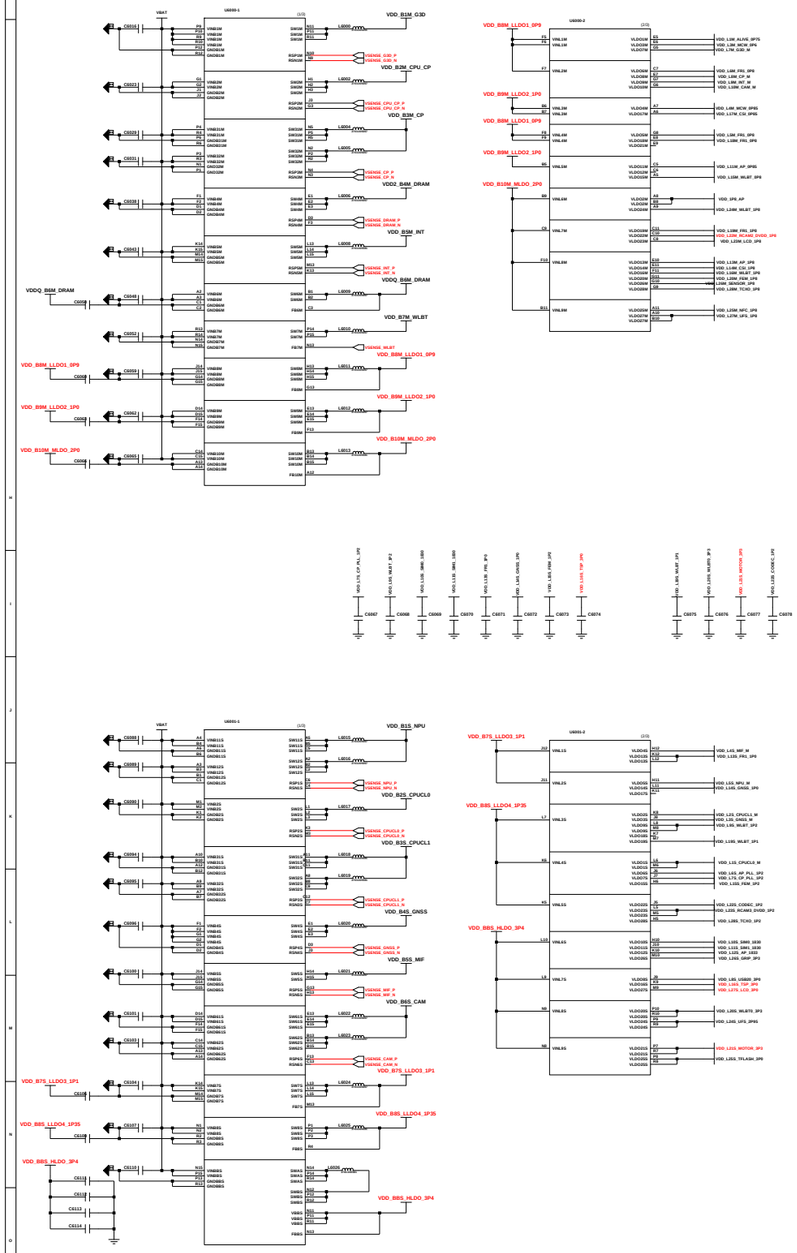

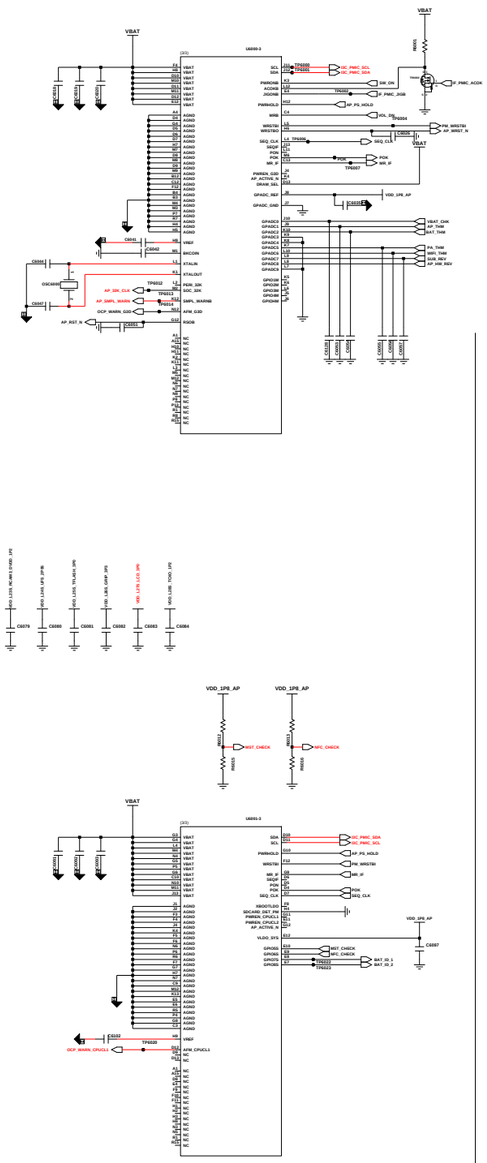

DIRECT CHARGER (SM5451)

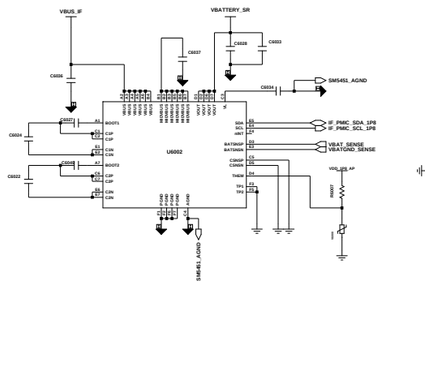

OVP

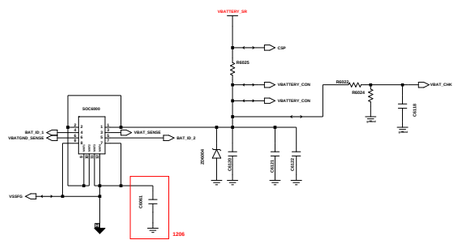

BATTERY CON

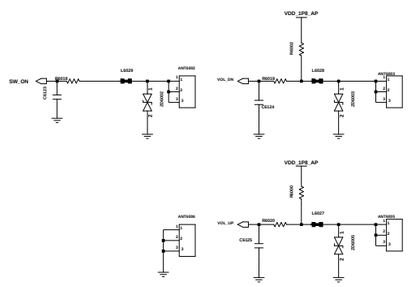

POWER & VOL KEY

Engineer:	A33 5G
Drawn by:	
R&D CHK:	TITLE: POWER/MOT/KEY
SOC CTRL CHK:	
IFPMIC SOCR CHK:	

Size | Changed by: | Date Changed: | Time Changed: | QA CHK: | REV: | Drawing Number:

SAMSUNG CONFIDENTIAL
THIS DOCUMENT CONTAINS CONFIDENTIAL PROPRIETARY INFORMATION THAT IS SAMSUNG ELECTRONICS CO'S PROPERTY. DO NOT DISCLOSE TO OR DUPLICATE FOR OTHERS EXCEPT AS AUTHORIZED BY SAMSUNG.

AUDIO & SENSOR PART

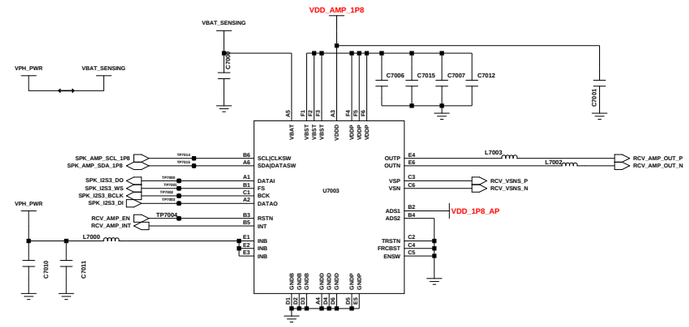

RCV AMP

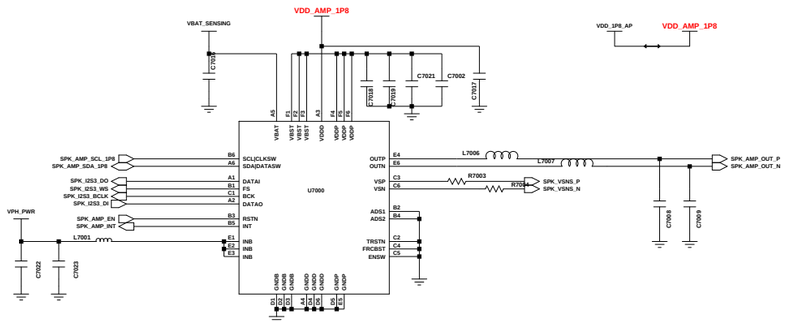

SPK AMP

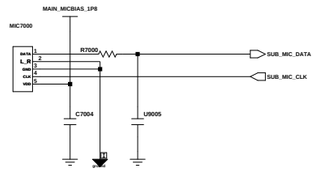

2nd MIC

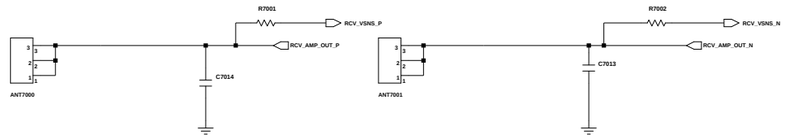

RCV CONTACT

SENSOR

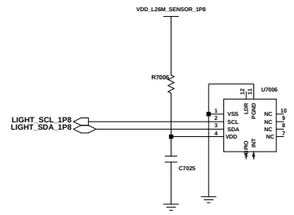

AMBIENT SENSOR

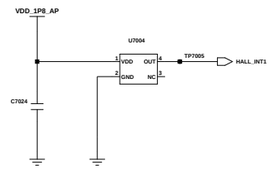

HALL IC

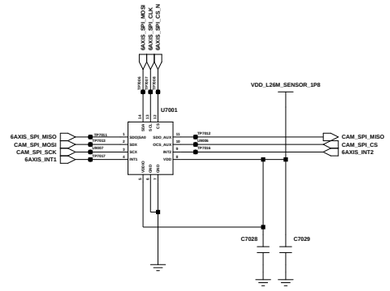

ACC&GYRO SENSOR

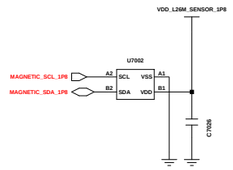

MAGNETIC SENSOR

DUAL SIM / T-FLASH (3in2)

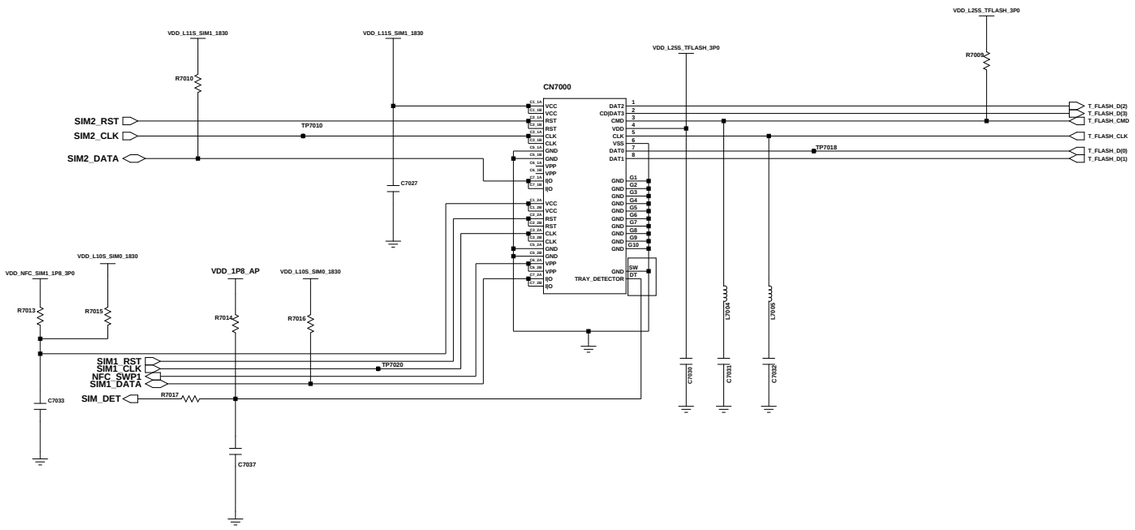

Engineer:			
Drawn by:			
R&D CHK:	TITLE: A33 5G		Size:
DOC CTRL CHK:			
MFG ENGR CHK:			
Changed by:	Date Changed:	Time Changed:	QA CHK:

REV | Drawing Number: | Page:

SAMSUNG CONFIDENTIAL
THIS DOCUMENT CONTAINS CONFIDENTIAL
PROPRIETARY INFORMATION THAT IS
SAMSUNG ELECTRONICS CO'S PROPERTY.
DO NOT DISCLOSE TO OR DUPLICATE FOR OTHERS
EXCEPT AS AUTHORIZED BY SAMSUNG.

CAMERA

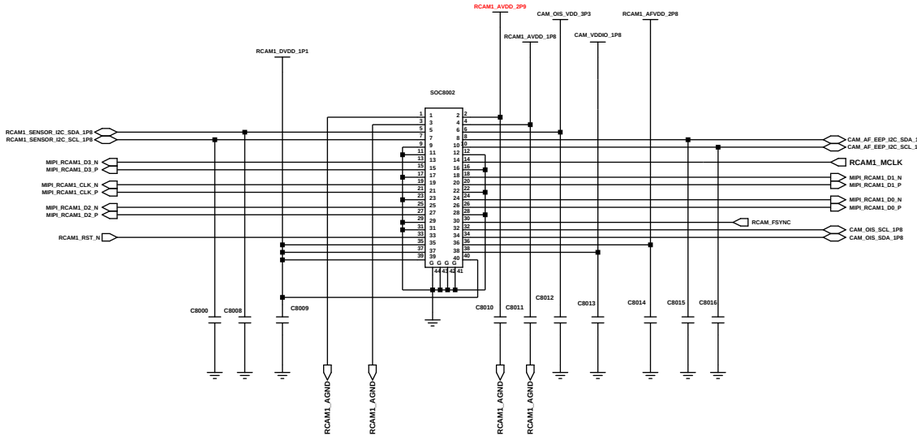

RCAM1_48M OIS(40PIN)

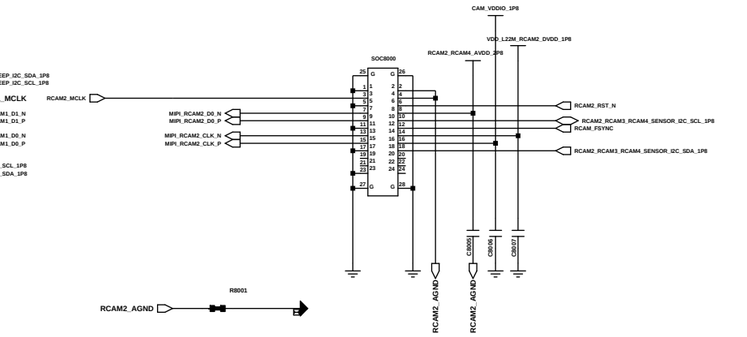

RCAM2_2M_BOKEH_CAMERA(24PIN)

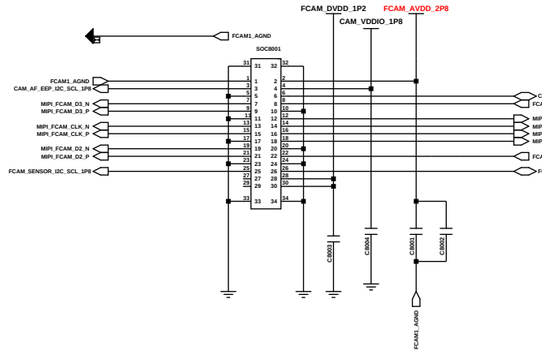

FRONT_13M CAMERA (30PIN)

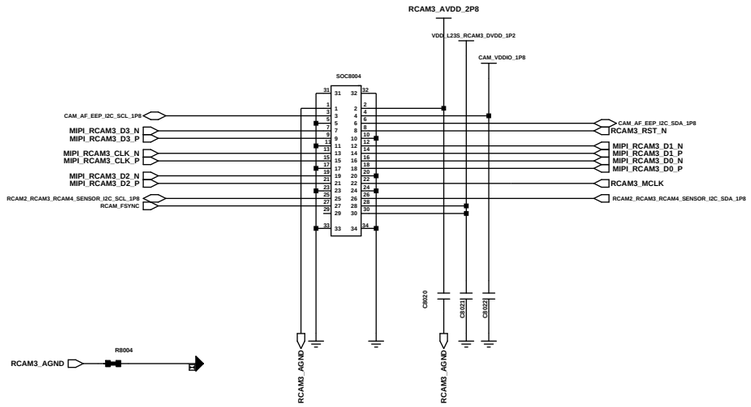

RCAM3_SUPER WIDE_8M CAMERA(30pin)

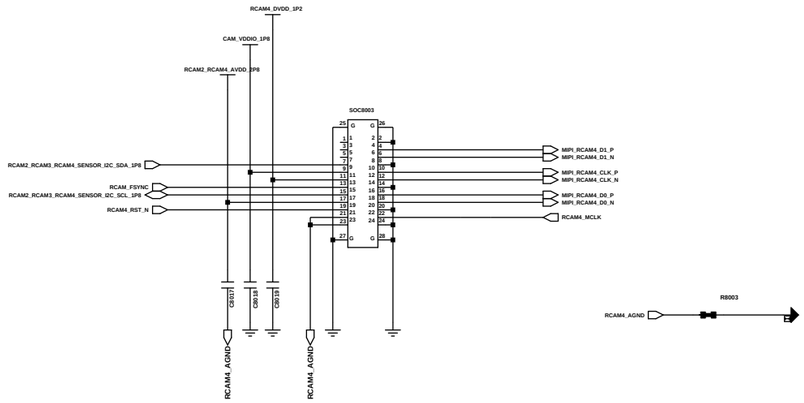

RCAM4_5M_MACRO_CAMERA(24PIN)

CAM PMIC

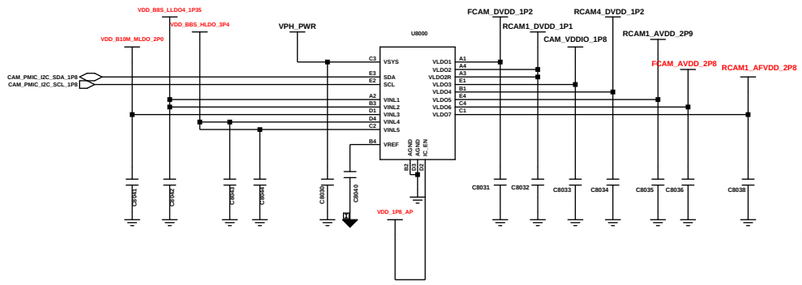

DECO CONTACT

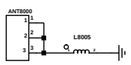

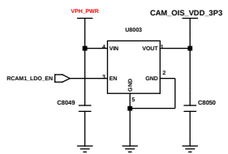

RCAM1_OIS

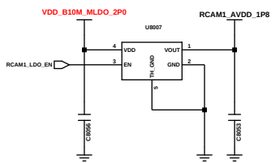

RCAM1_AVDD

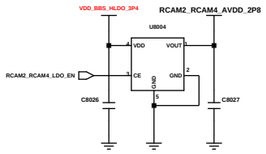

RCAM2_RCAM4_AVDD

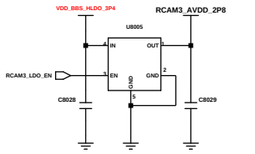

RCAM3_AVDD

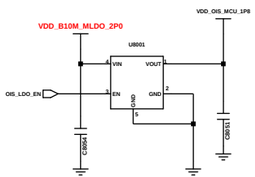

CAM MCU_DVDD

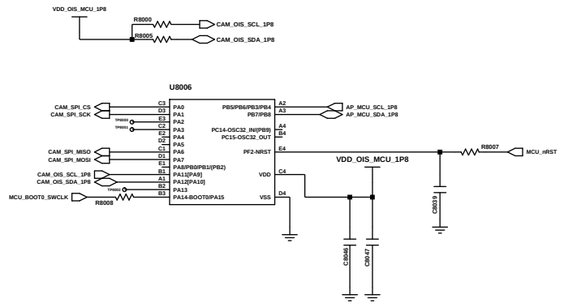

CAM MCU

Engineer:	A33 5G		
Drawn by:			
R&D CHK:	TITLE: CAMERA		Size
DOC CTRL CHK:			
MFG ENGR CHK:			
QA CHK:	REV	Drawing Number:	Page: 7/8

Changed by: | Date Changed: | Time Changed:

SAMSUNG CONFIDENTIAL
THIS DOCUMENT CONTAINS CONFIDENTIAL PROPRIETARY INFORMATION THAT IS SAMSUNG ELECTRONICS CO'S PROPERTY. DO NOT DISCLOSE TO OR DUPLICATE FOR OTHERS EXCEPT AS AUTHORIZED BY SAMSUNG.

C2C (Conn to Conn FPCB)

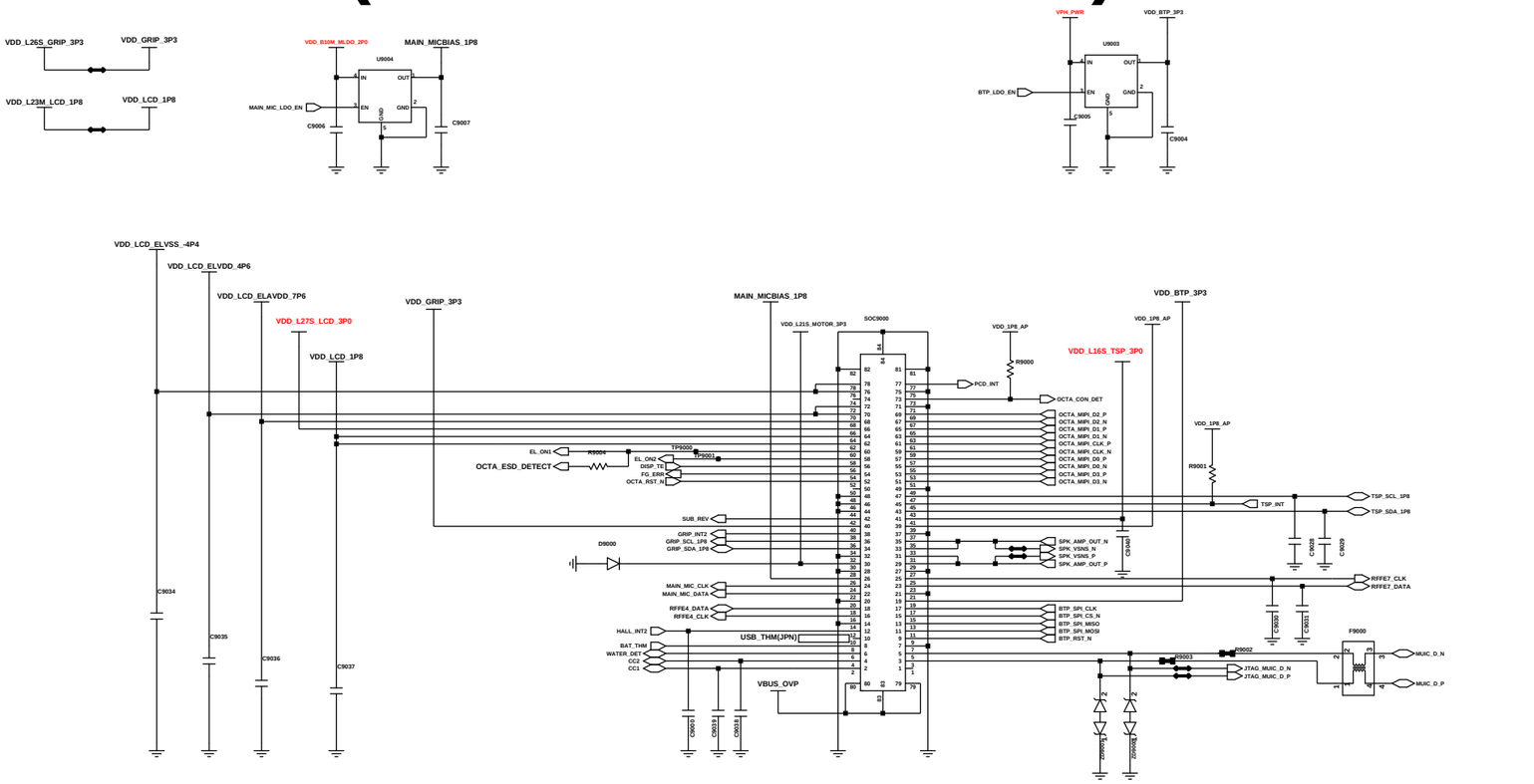

BOTH HOLE

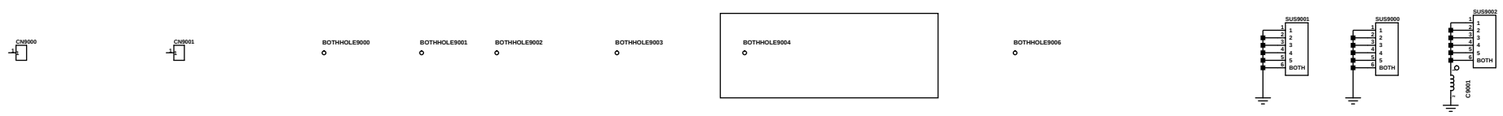

SHIELD CAN

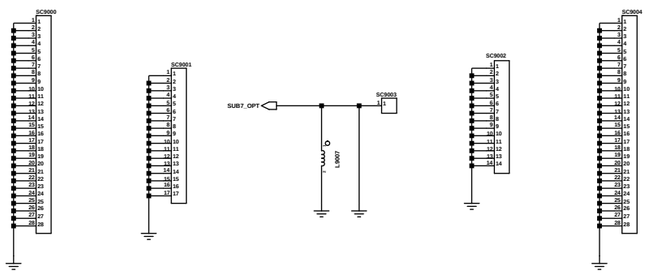

REGION		MEMORY		
R9013 NC	B : EUR	R9017 NC	4/128	
R9014 NC	0 : HK	R9018	6/128	
R9015 NC	N : KOR	R9019 NC	8/128	
R9016	E : SEA, MEA			
R9010 NC	S : SWA			
R9011 NC	M : LA			

DISPLAY

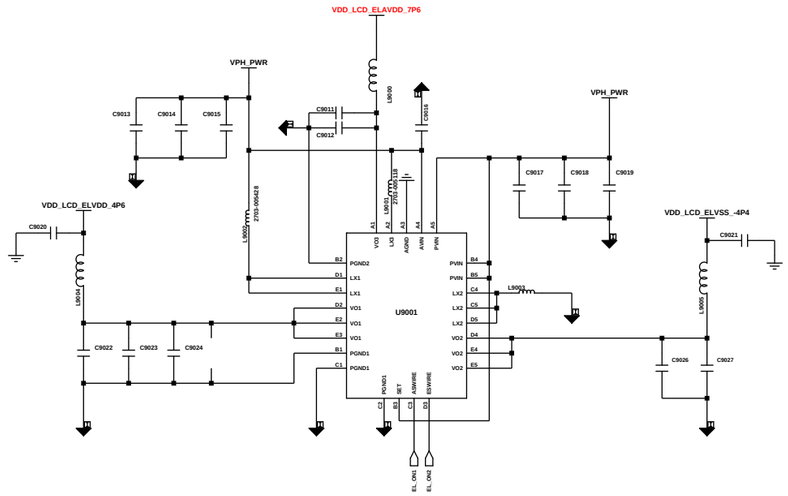

DISPLAY PMIC

Engineer:	A33 5G
Drawn by:	
R&D CHK:	TITLE: Display
DOC CTRL CHK:	
MFG ENGR CHK:	
QA CHK:	REV: Drawing Number: Page:

Changed by: user28 | Date Changed: Thursday, June 18, 2015 | Time Changed: 10:18:28 am

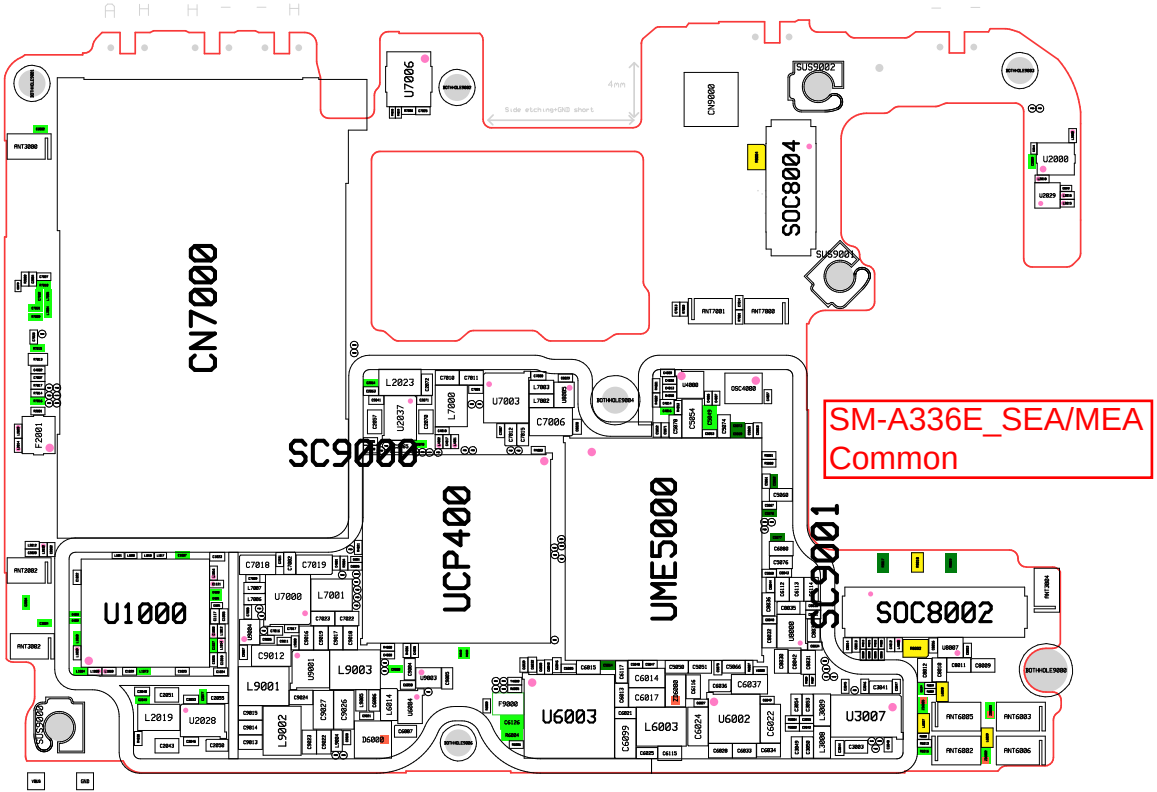
SM-A336E_SEA/MEA
Common
CN7000
SC9000
UCP400
UME5000
SC9001
SOC8004
SOC8002
U1000
U7006
U7003
U7000
L7001
L9003
L9001
L9002
L2019
U2028
U6003
L6003
U6002
U3007
U2000
CN9000
SU59002
SU59001
SC5000
JTAG4000
JTAG4001
CN4000

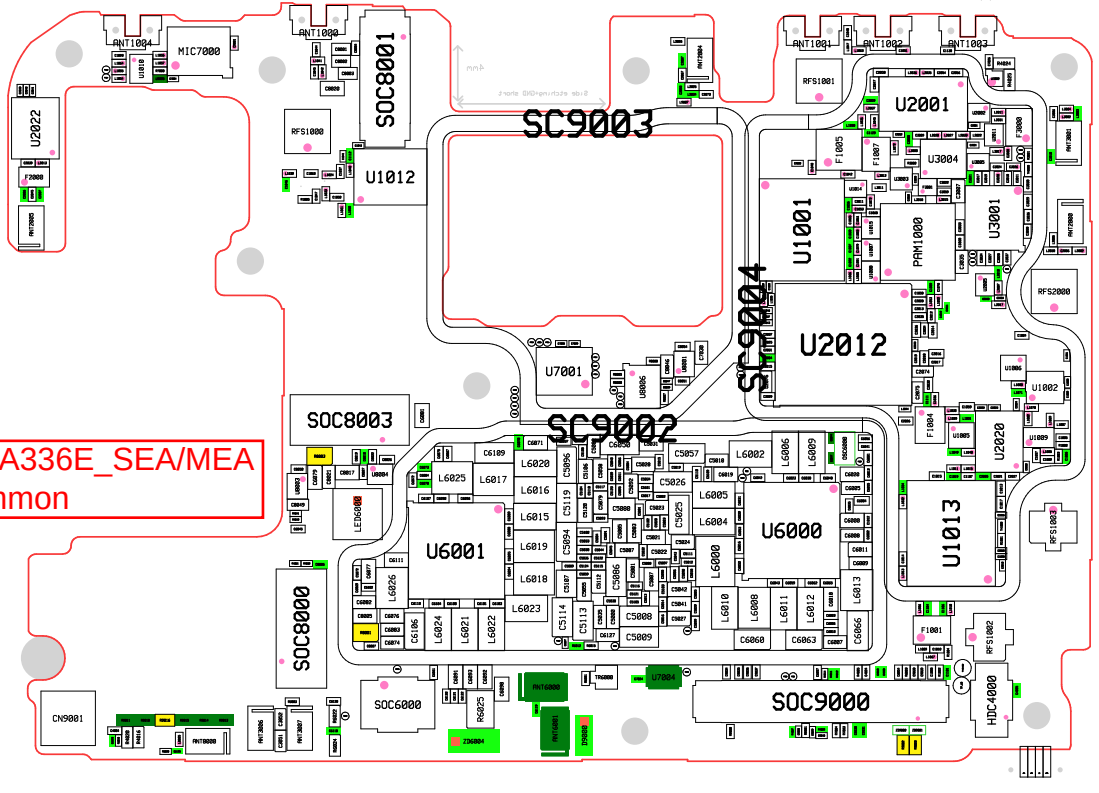
SC9003
SC9004
SC9002
SOC8001
SOC8003
SOC8000
SOC6000
SOC9000
U1012
U1001
U2012
U2001
U3004
U3001
U7001
U6001
U6000
U1013
U2022
U1002
U2020
U1009
MIC7000
RFS1000
RFS1001
RFS2000
RFS1002
RFS1003
PAM1000
HDC4000
CN9001
ANT1004
ANT1000
ANT1001
ANT1002
ANT1003
ANT6000
ANT6001
ANT8000
ANT3006
ANT3007
ANT3005
ANT3008
ANT3004
ANT3003
F1005
F1007
F2000
F1004
F1001
LED6000
U8010
U8096
U8095
U8006
U8005
U8004
U8009
U8003
U8002
U8001
U7004
TRG8000
RG825
Z9004
Z9003
Z9002
Z9001
C5056
C5057
C5026
C5025
C5094
C5086
C5119
C5114
C5113
C5008
C5009
C6189
C6111
C6106
C6060
C6063
C6066
C6080
C6081
C6082
C6083
C6084
C6085
C6086
C6087
C6088
C6089
C6090
C6091
C6092
C6093
C6094
C6095
C6096
C6097
C6098
C6099
C6100
C6101
C6102
C6103
C6104
C6105
C6107
C6108
C6109
C6110
C6112
C6113
C6114
C6115
C6116
C6117
C6118
C6119
C6120
C6121
C6122
C6123
C6124
C6125
C6126
C6127
L6025
L6017
L6016
L6015
L6019
L6018
L6023
L6026
L6024
L6021
L6022
L6020
L6002
L6006
L6009
L6005
L6004
L6000
L6010
L6008
L6011
L6012
L6013
L6007
L6003
L6001
L6014
L6015
L6016
L6017
L6018
L6019
L6020
L6021
L6022
L6023
L6024
L6025
L6026
L6027
L6028
L6029
L6030
L6031
L6032
L6033
L6034
L6035
L6036
L6037
L6038
L6039
L6040
L6041
L6042
L6043
L6044
L6045
L6046
L6047
L6048
L6049
L6050
L6051
L6052
L6053

SAMSUNG CONFIDENTIAL
THIS DOCUMENT CONTAINS CONFIDENTIAL
PROPRIETARY INFORMATION THAT IS
SAMSUNG ELECTRONICS CO'S PROPERTY.
DO NOT DISCLOSE TO OR DUPLICATE FOR OTHERS
EXCEPT AS AUTHORIZED BY SAMSUNG.

A33 5G REV0.3A

SM-A336E_SWA

2021.12.06

Sheet01 : GSM / WCDMA / LTE / NR(N41) RF
Sheet02 : TRANSCEIVER, SUB ANT
Sheet03 : CONNECTIVITY(BT/WIFI/FM), NFC
Sheet04 : AP(PAPAYA-INTERFACE,GPIO)
Sheet05 : AP(POWER), MEM(uMCP)
Sheet06 : PMIC/SUB PMIC, IF PMIC
Sheet07 : AUDIO Codec, SENSOR, SIM, SD
Sheet08 : CAMERA
Sheet09 : DISPLAY PMIC, C2C

SAMSUNG CONFIDENTIAL
THIS DOCUMENT CONTAINS CONFIDENTIAL
AND PROPRIETARY INFORMATION OF
SAMSUNG ELECTRONICS CO. LTD. PROPERTY.
DO NOT DISCLOSE TO OR DUPLICATE FOR OTHERS
EXCEPT AS AUTHORIZED BY SAMSUNG.

RF PART 1

MAIN ANT1 LB

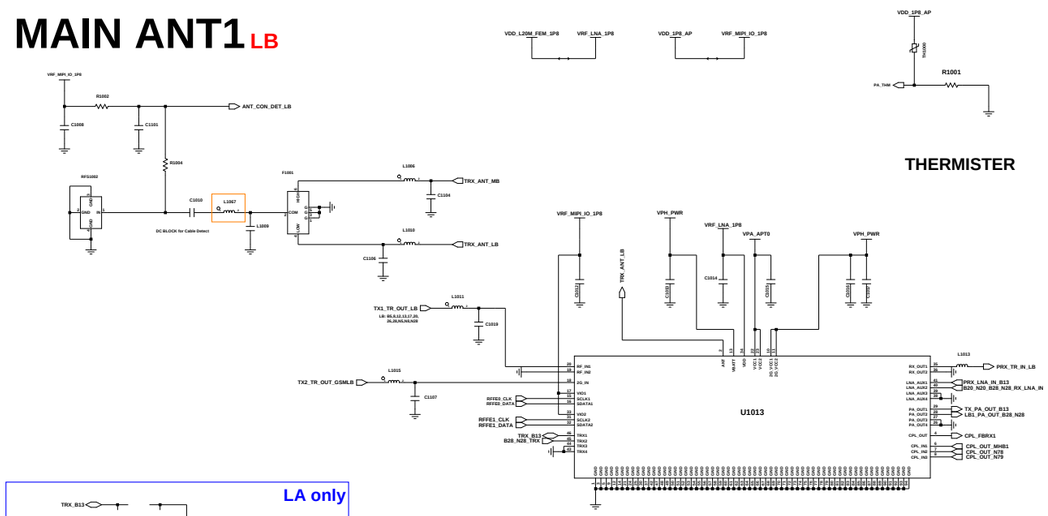

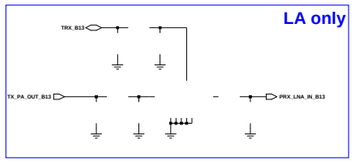

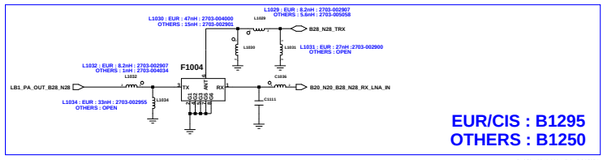

MAIN ANT2

MHB, n78/79 DRX

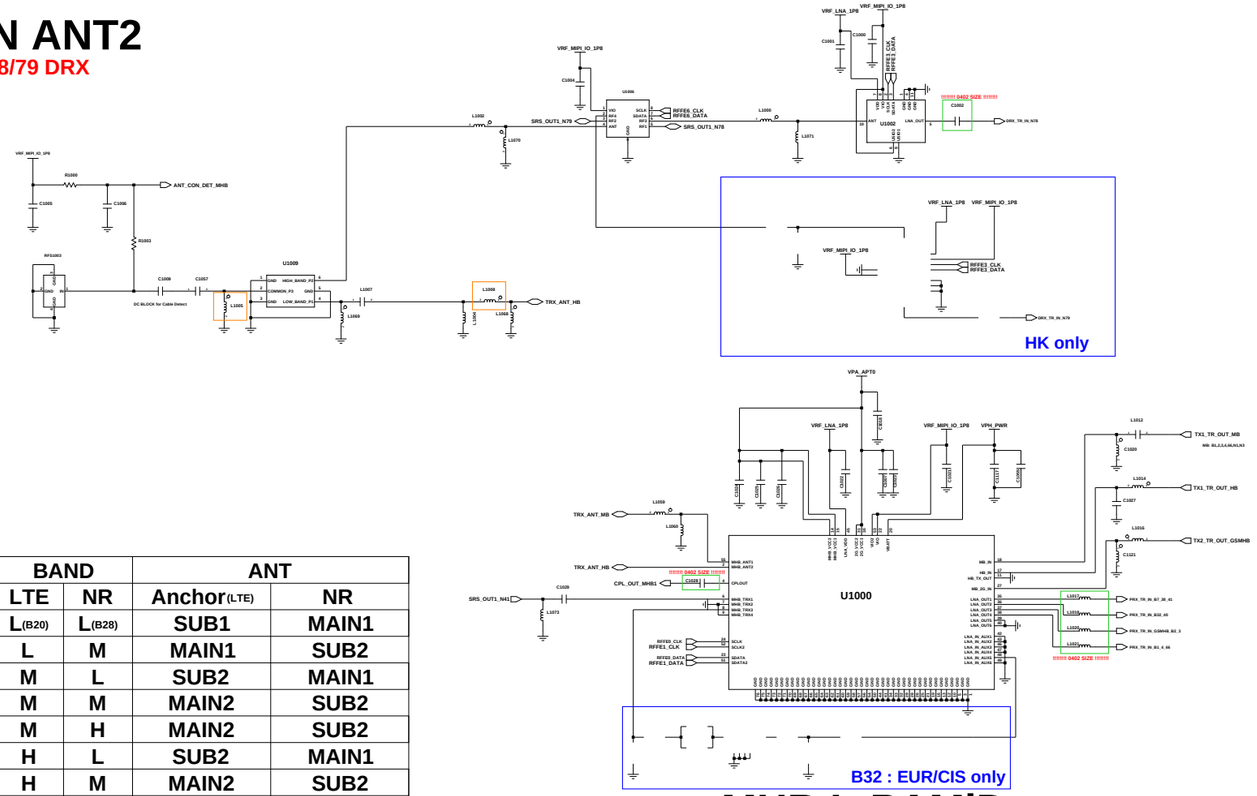

BAND		ANT	
LTE	NR	Anchor(LTE)	NR
L(B20)	L(B28)	SUB1	MAIN1
L	M	MAIN1	SUB2
M	L	SUB2	MAIN1
M	M	MAIN2	SUB2
M	H	MAIN2	SUB2
H	L	SUB2	MAIN1
H	M	MAIN2	SUB2
L/M/H	UHB	MAIN	SUB

SUB ANT1

LB
HB MIMO

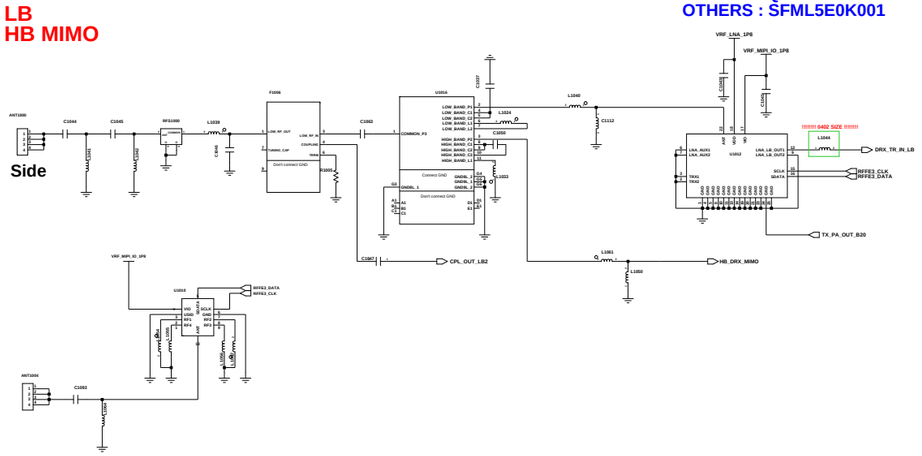

SUB ANT2

GPS, MHB, WiFi 2.4G

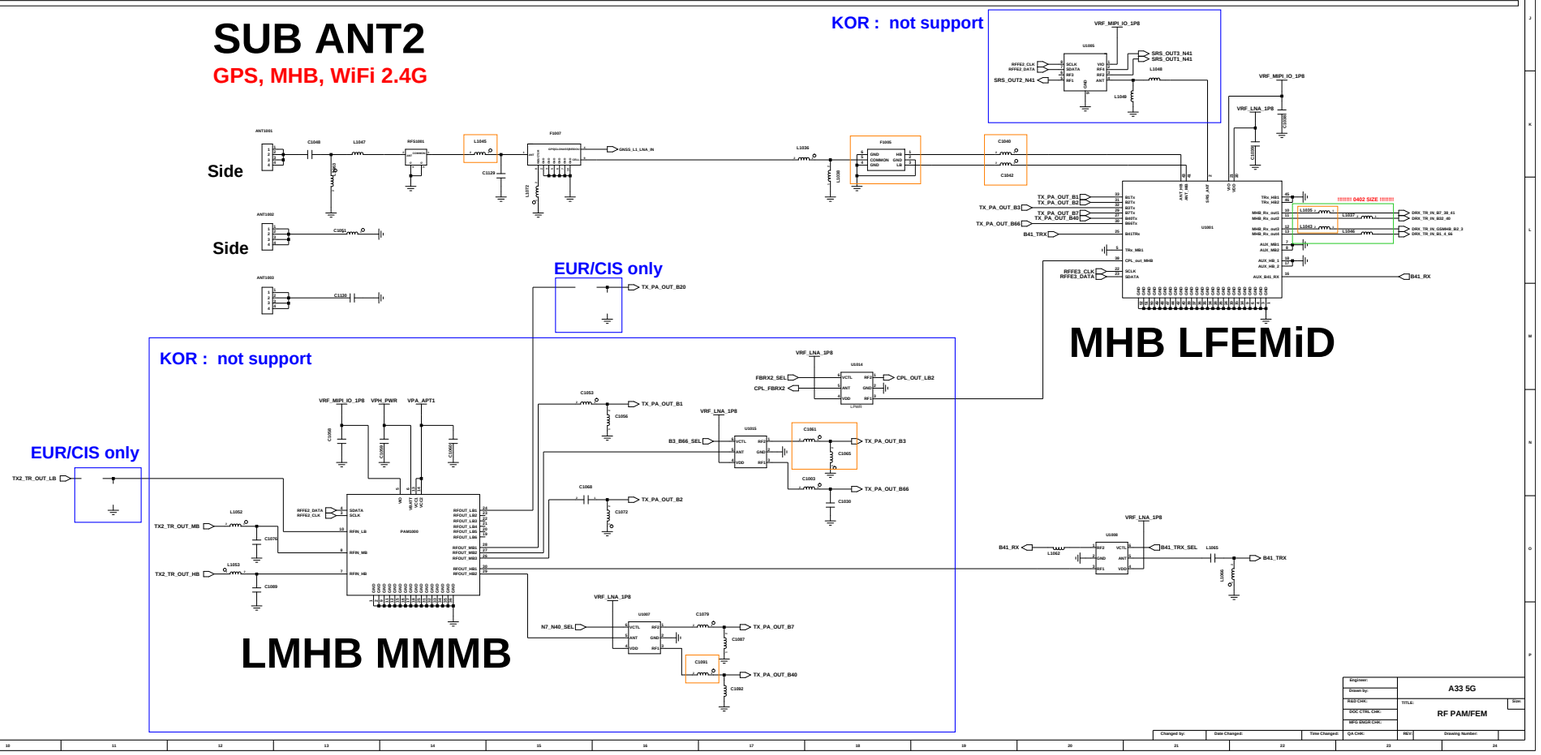

SAMSUNG CONFIDENTIAL
THIS DOCUMENT CONTAINS CONFIDENTIAL
AND PROPRIETARY INFORMATION OF
SAMSUNG ELECTRONICS CO. LTD. PROPERTY.
DO NOT DISCLOSE TO OR DUPLICATE FOR OTHERS
EXCEPT AS AUTHORIZED BY SAMSUNG.

TRANSCEIVER (S5511)

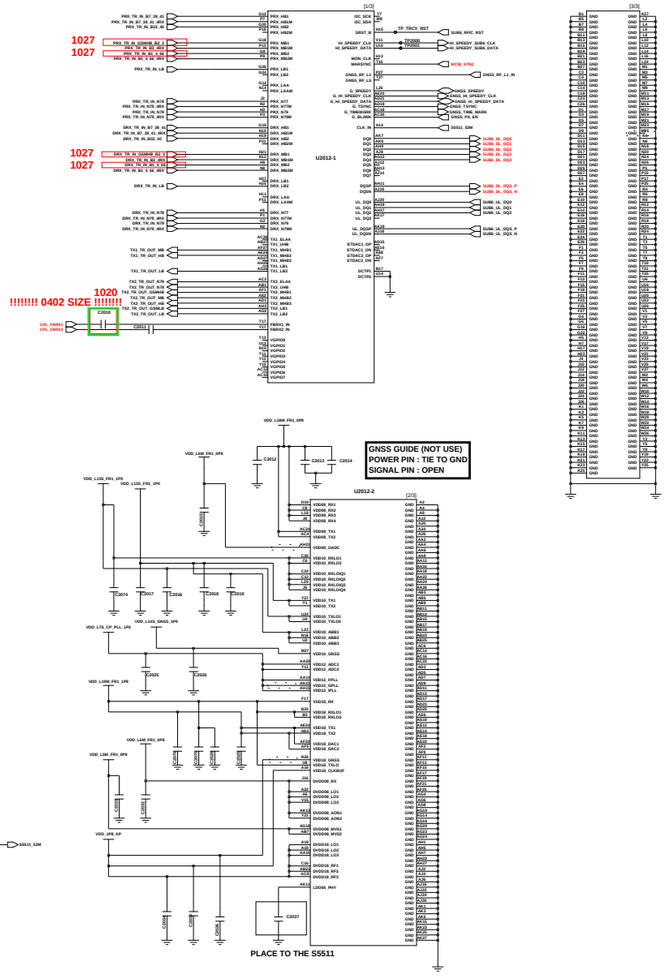

APT0

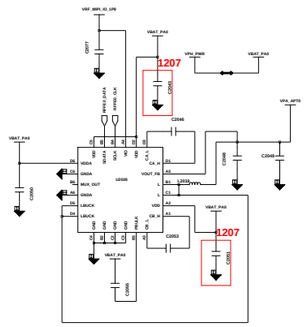

APT1

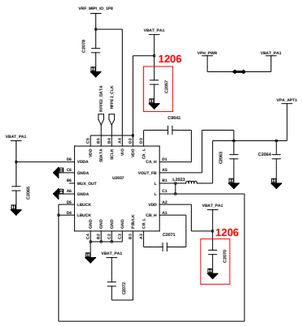

SUB ANT7
n78/79 PRX MIMO

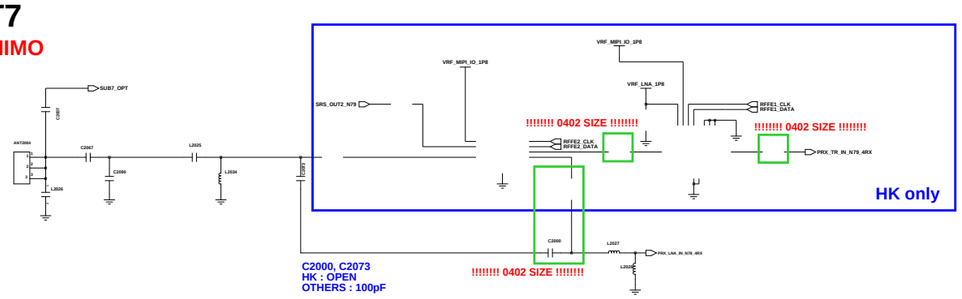

SUB ANT4
N78/79 TRX

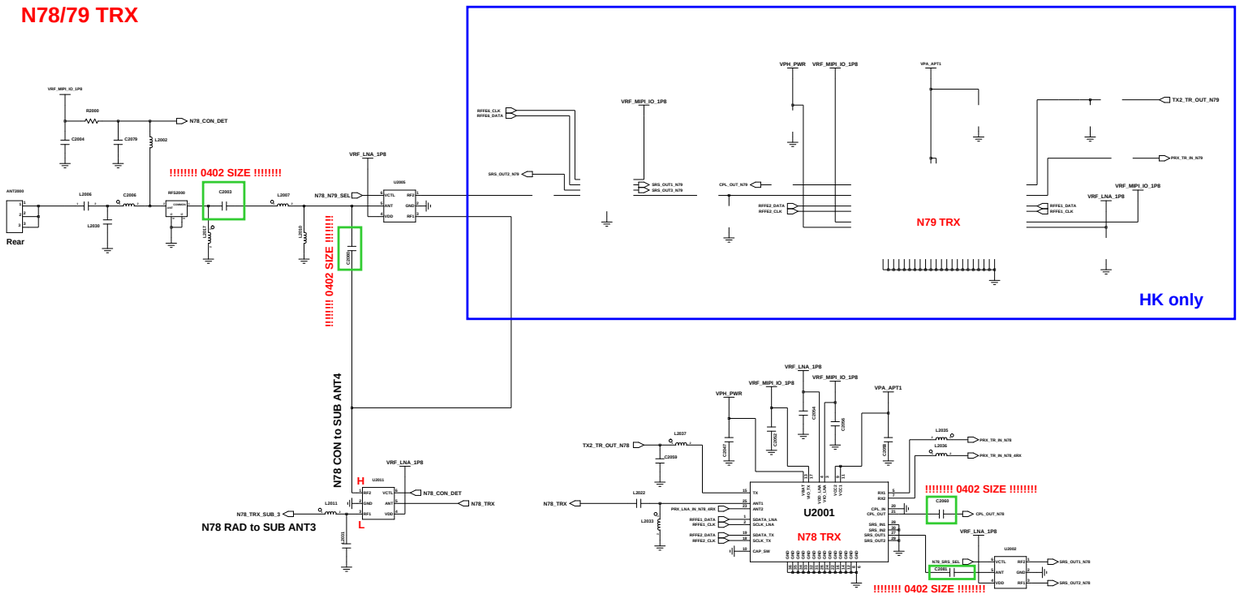

SUB ANT5
MHB MIMO

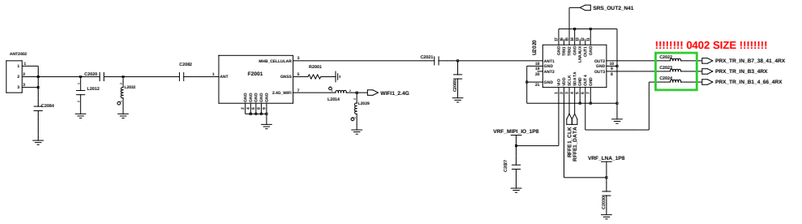

SUB ANT6
n78/79 DRX MIMO
MB MIMO

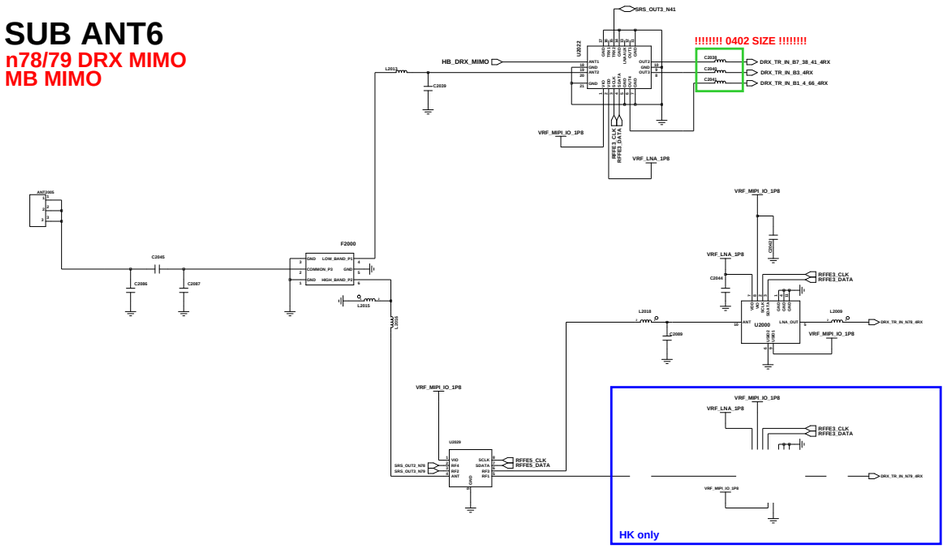

Engineer:	A33 5G
Initiator by:	
PAD Coll.:	TITLE: RF TRCV/PAM/APT
SDC & FML Coll.:	
MFG Vendor Coll.:	
QA Coll.:	Drawing Number:

Changed by | Date Changed | Time Changed

SAMSUNG CONFIDENTIAL
THIS DOCUMENT CONTAINS CONFIDENTIAL
PROPRIETARY INFORMATION THAT IS
SAMSUNG ELECTRONICS CO'S PROPERTY.
DO NOT DISCLOSE TO OR DUPLICATE FOR OTHERS
EXCEPT AS AUTHORIZED BY SAMSUNG.

WIFI/BT/FM

SUB ANT3

WiFi 5G, N78 TRX

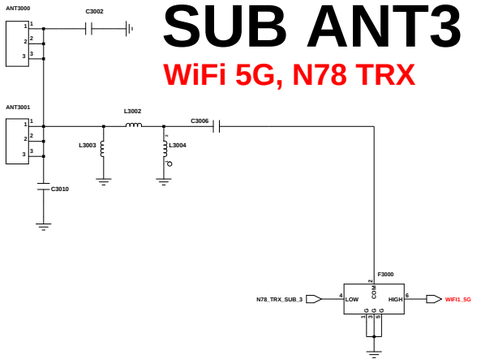

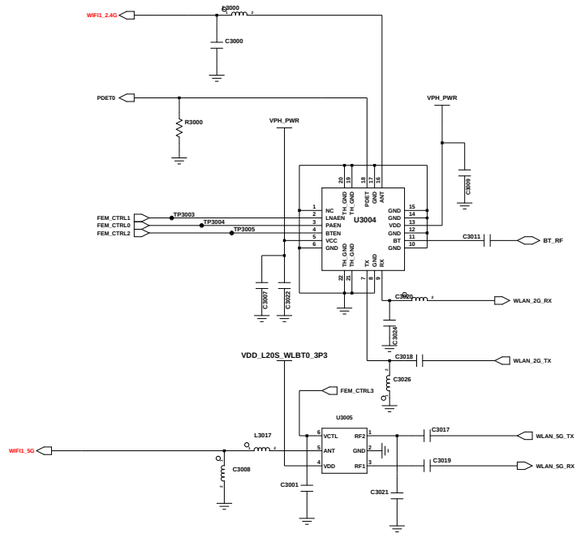

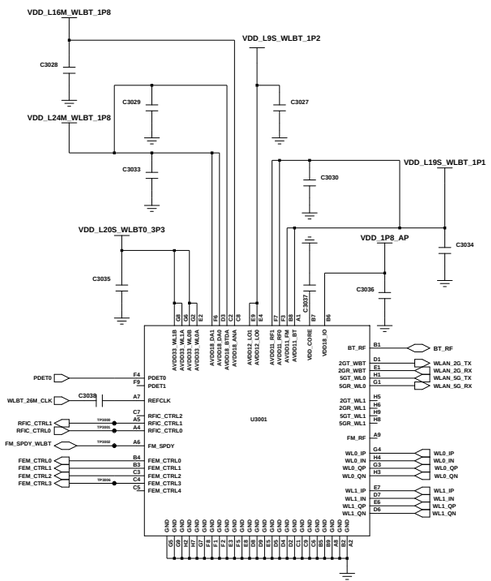

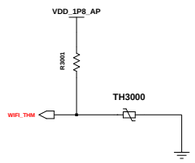

GPS L1 / GNSS/BEIDOU

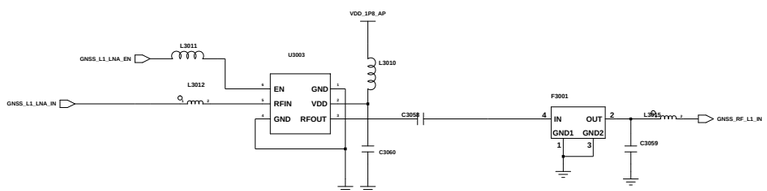

MST

use 106 internal function

GND CCP

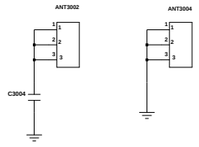

NFC

UICC ONLY / SWA not support

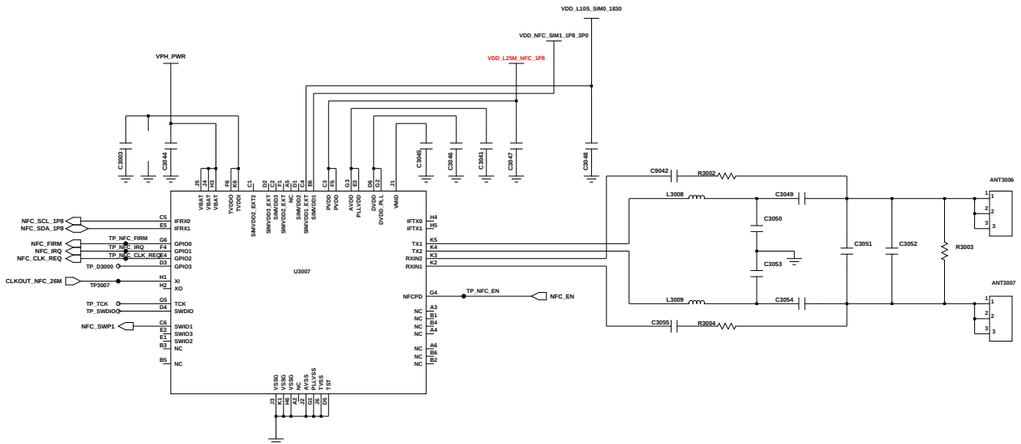

Engineer:	A33 5G		
Drawn by:			
R&D CHK:	TITLE: WIFI/NFC/MST/GPS	Size:	
DOC CTRL CHK:			
MFG ENGR CHK:			
QA CHK:	REV	Drawing Number:	Page: 3

Changed by: user118 | Date Changed: | Time Changed:

SAMSUNG CONFIDENTIAL
THIS DOCUMENT CONTAINS CONFIDENTIAL
AND PROPRIETARY INFORMATION OF
SAMSUNG ELECTRONICS CO'S PROPERTY.
DO NOT DISCLOSE TO OR DUPLICATE FOR OTHERS
EXCEPT AS AUTHORIZED BY SAMSUNG.

PAPAYA

UCP400-1

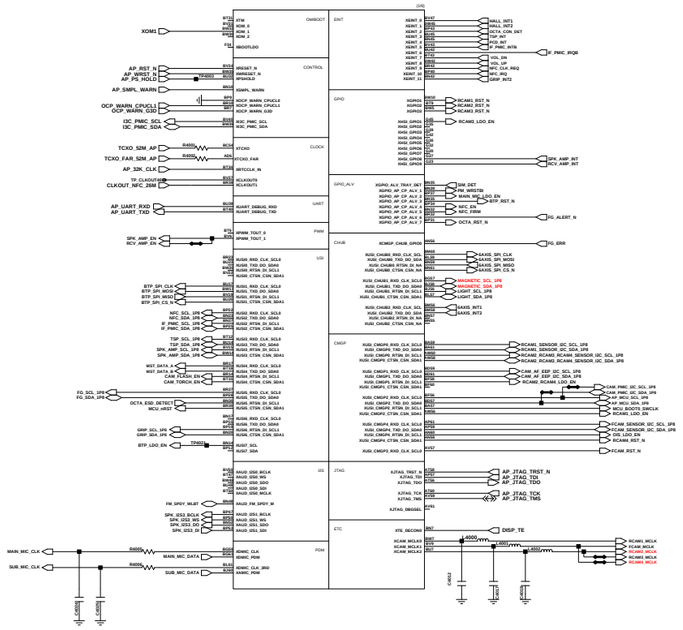

UCP400-2

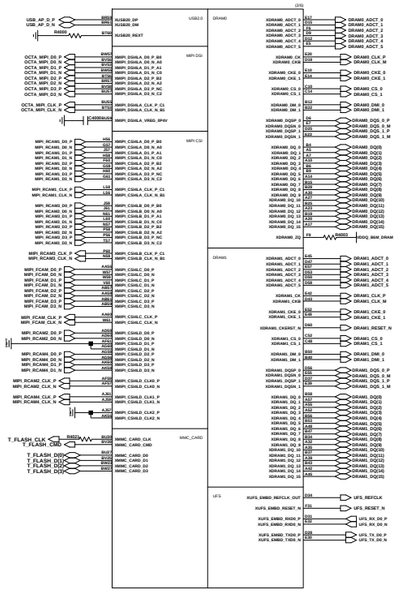

UCP400-3

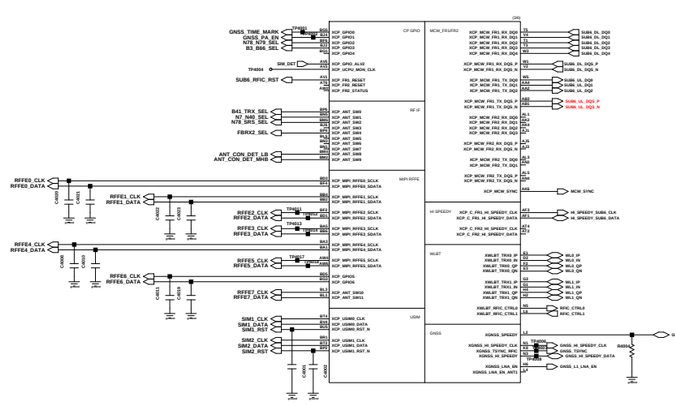

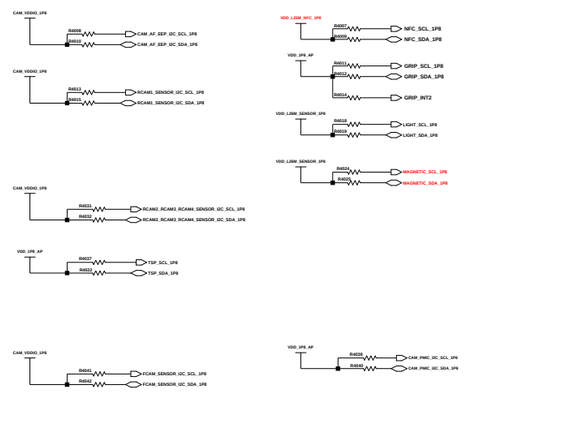

AP HW REV

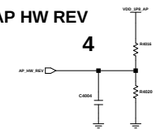

REV	R1(Kohm)	R2(Kohm)	AP	
0	NC	0	BRINGUP	
1	430	30	R00	
2	390	62	R01	
3	360	91	R02	
4	330	120	R03/R03A	1206
5	300	150		
6	270	180		
7	240	220		
8	200	240		
9	180	270		
10	160	300		
11	120	330		
12	91	360		
13	62	390		
14	30	430		
15	10	NC		

AP JTAG

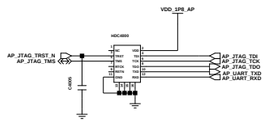

PIN [3:1]	Function	
OM[2:0]	1st Boot	2nd Boot
000	UFS	USB
001	-----	USB
010	USB	-----
100	SD	USB

iROM BOOT

PCB JTAG

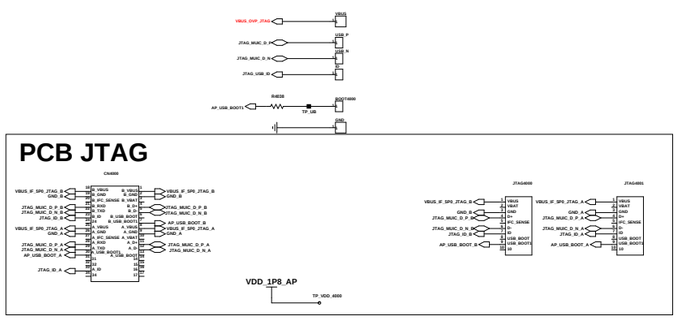

SYSTEM CLOCK

Engineer:	A33 5G
Design Engineer:	
Design Manager:	
EVES CHK:	TITLE:
DOC CTRL CHK:	2020_100916
MFG DOCR CHK:	
QA CHK:	ECO:

Changed By | Date Changed | Time Changed | Drawing Number | Page

SAMSUNG CONFIDENTIAL
THIS DOCUMENT CONTAINS CONFIDENTIAL PROPRIETARY INFORMATION THAT IS SAMSUNG ELECTRONICS CO'S PROPERTY. DO NOT DISCLOSE TO OR DUPLICATE FOR OTHERS EXCEPT AS AUTHORIZED BY SAMSUNG.

UCP400-4

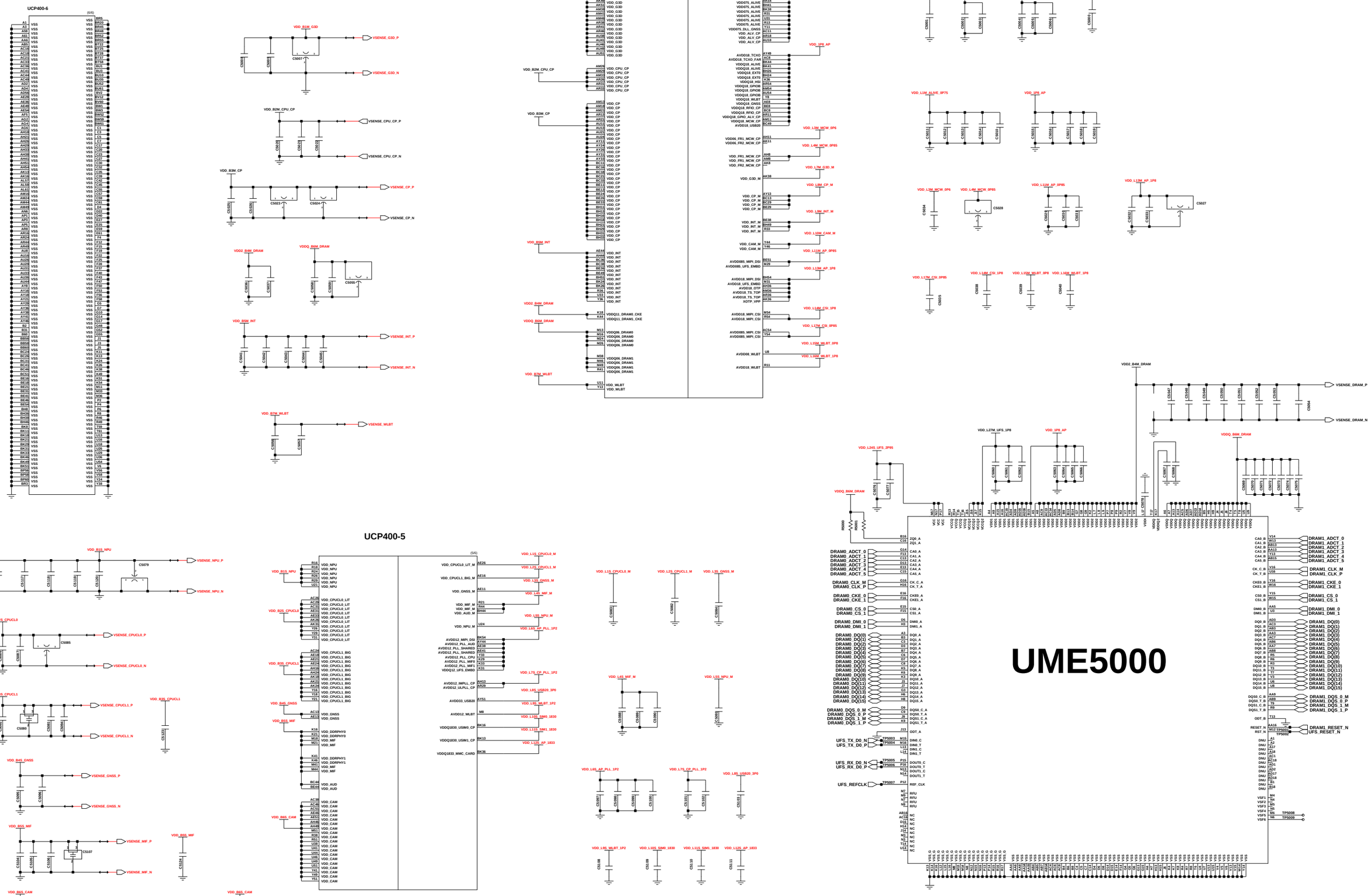

4GB + 128GB uMCP : 1108-000713
6GB + 128GB uMCP : 1108-000714
8GB + 128GB uMCP : 1108-000721

Engineer:	A33 5G
Drawn by:	
R&D CHK:	TITLE: AP/CP/uMCP
DOC CTRL CHK:	Size:
MFG ENGR CHK:	
QA CHK:	REV / Drawing Number: / Page:

Changed by: | Date Changed: | Time Changed:

SAMSUNG CONFIDENTIAL
THIS DOCUMENT CONTAINS CONFIDENTIAL
AND PROPRIETARY INFORMATION OF
SAMSUNG ELECTRONICS CO'S PROPERTY.
DO NOT DISCLOSE TO OR DUPLICATE FOR OTHERS
EXCEPT AS AUTHORIZED BY SAMSUNG.

IF PMIC(S2MU106)

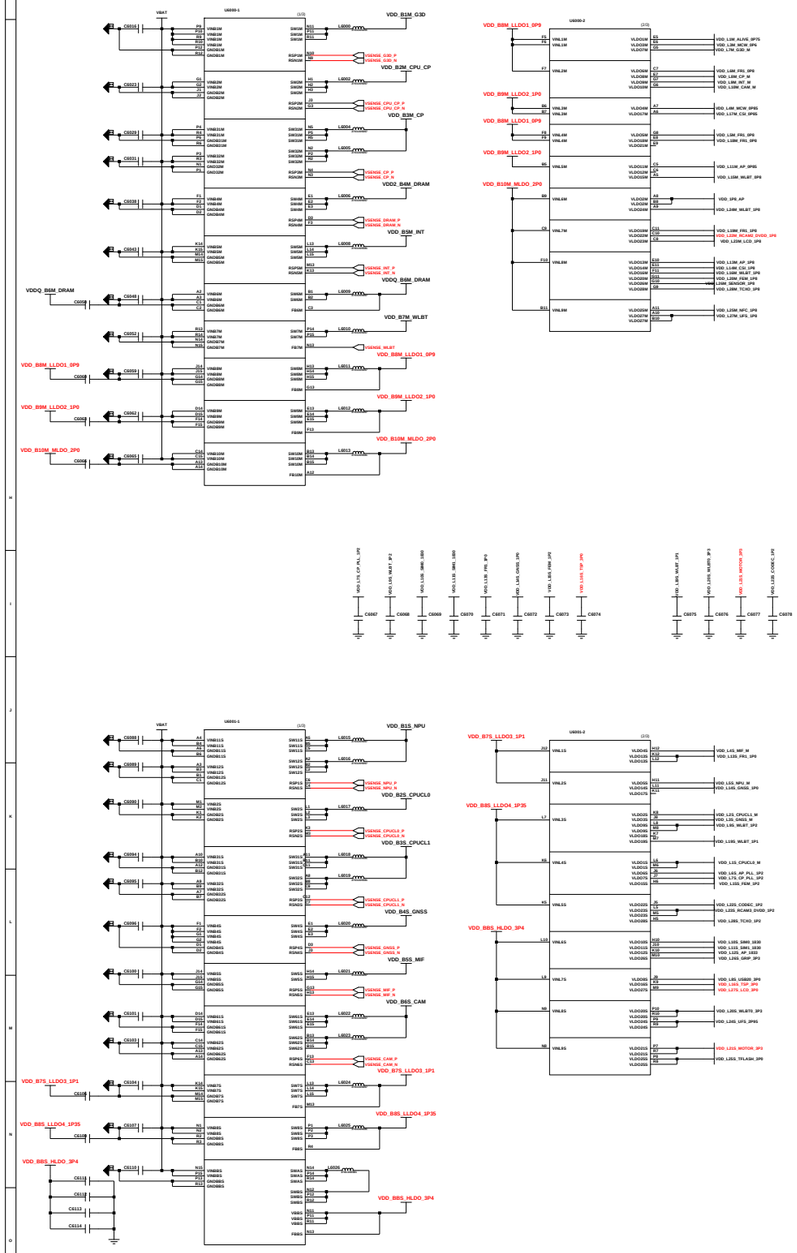

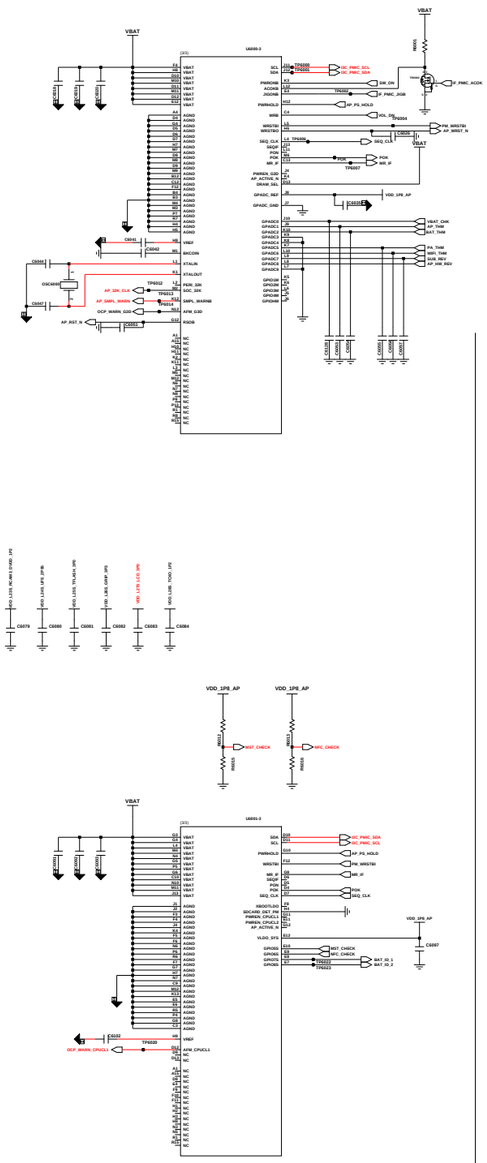

DIRECT CHARGER (SM5451)

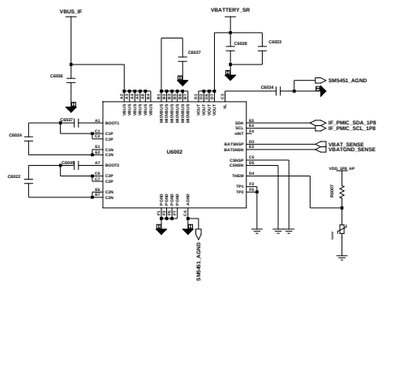

OVP

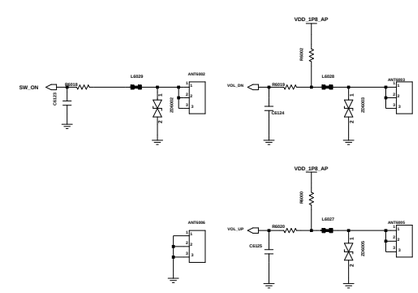

POWER & VOL KEY

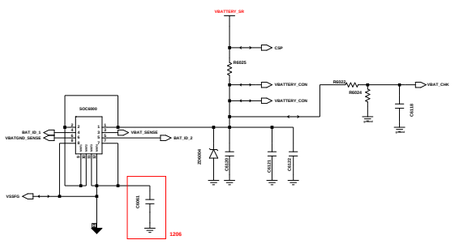

BATTERY CON

Engineer:	A33 5G
Drawn by:	
R&D CHK:	TITLE: POWER/MOT/KEY
SOC CTRL CHK:	
IF-PMIC CHK:	
QA CHK:	Size / Rev / Drawing Number

SAMSUNG CONFIDENTIAL
THIS DOCUMENT CONTAINS CONFIDENTIAL PROPRIETARY INFORMATION THAT IS SAMSUNG ELECTRONICS CO'S PROPERTY. DO NOT DISCLOSE TO OR DUPLICATE FOR OTHERS EXCEPT AS AUTHORIZED BY SAMSUNG.

AUDIO & SENSOR PART

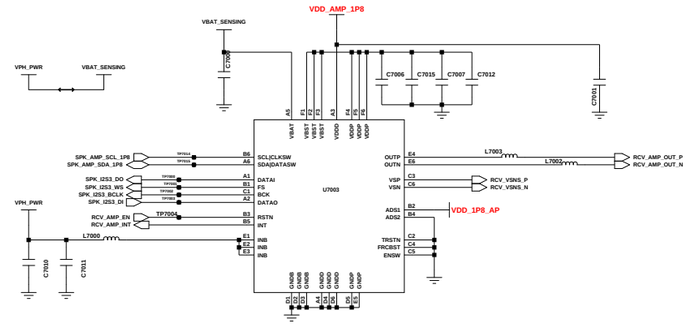

RCV AMP

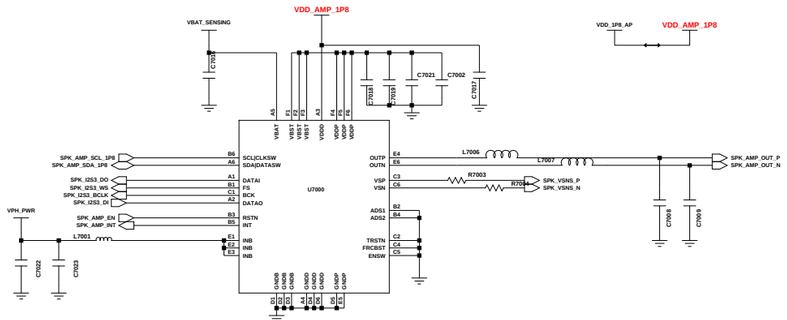

SPK AMP

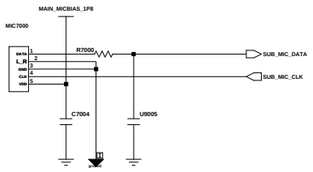

2nd MIC

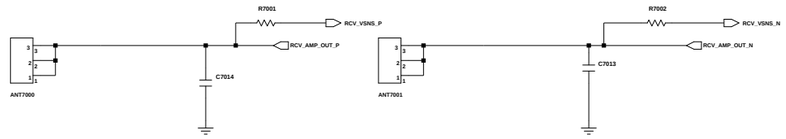

RCV CONTACT

SENSOR

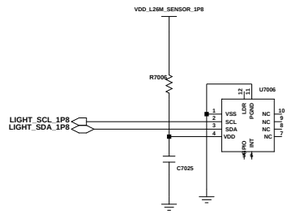

AMBIENT SENSOR

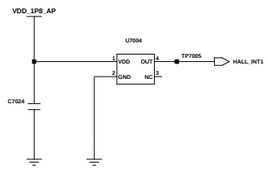

HALL IC

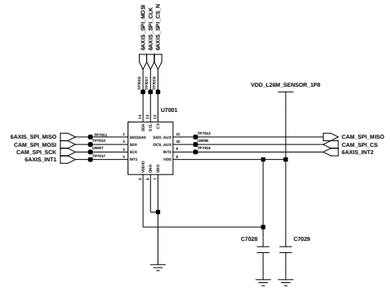

ACC&GYRO SENSOR

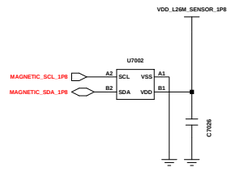

MAGNETIC SENSOR

DUAL SIM / T-FLASH (3in2)

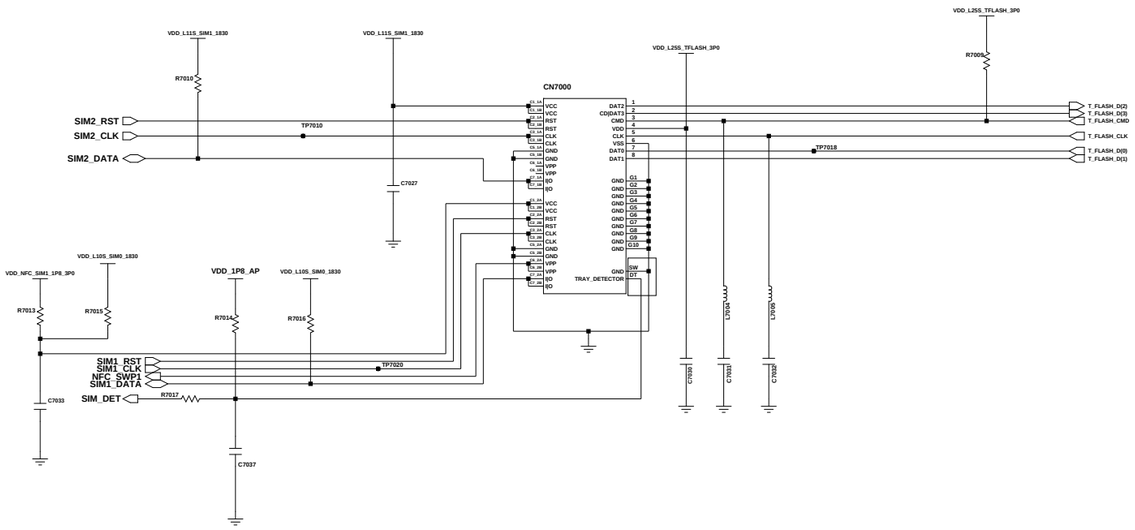

Engineer:			
Drawn by:			
R&D CHK:	TITLE: A33 5G		Size:
DOC CTRL CHK:			
MFG ENGR CHK:			
Changed by:	Date Changed:	Time Changed:	QA CHK:

REV | Drawing Number: | Page:

SAMSUNG CONFIDENTIAL
THIS DOCUMENT CONTAINS CONFIDENTIAL
PROPRIETARY INFORMATION THAT IS
SAMSUNG ELECTRONICS CO'S PROPERTY.
DO NOT DISCLOSE TO OR DUPLICATE FOR OTHERS
EXCEPT AS AUTHORIZED BY SAMSUNG.

CAMERA

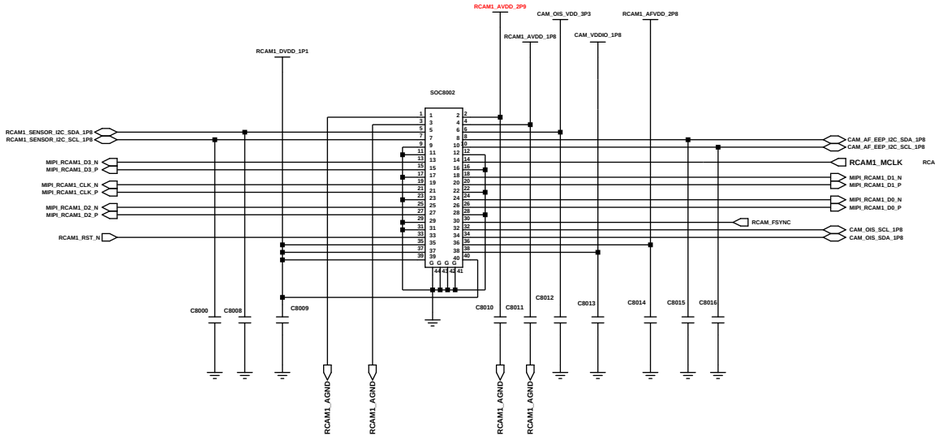

RCAM1_48M OIS(40PIN)

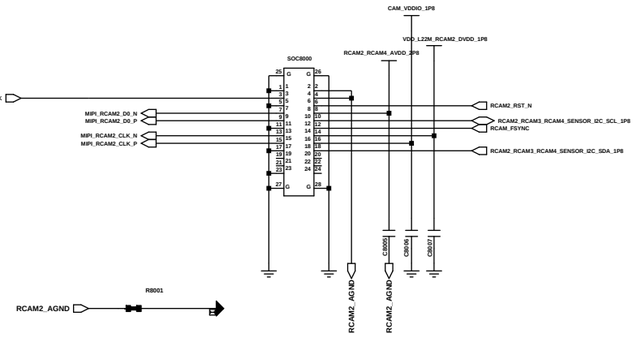

RCAM2_2M_BOKEH_CAMERA(24PIN)

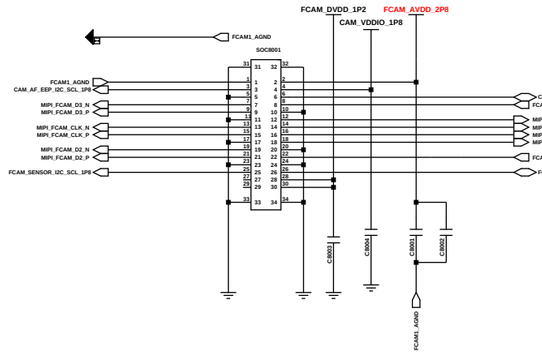

FRONT_13M CAMERA (30PIN)

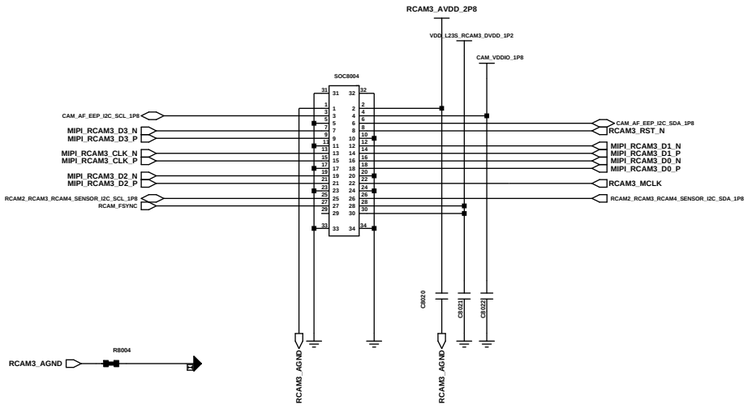

RCAM3_SUPER WIDE_8M CAMERA(30pin)

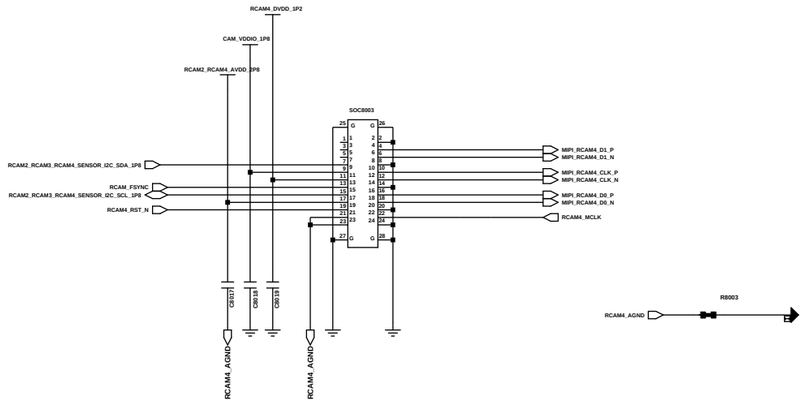

RCAM4_5M_MACRO_CAMERA(24PIN)

CAM PMIC

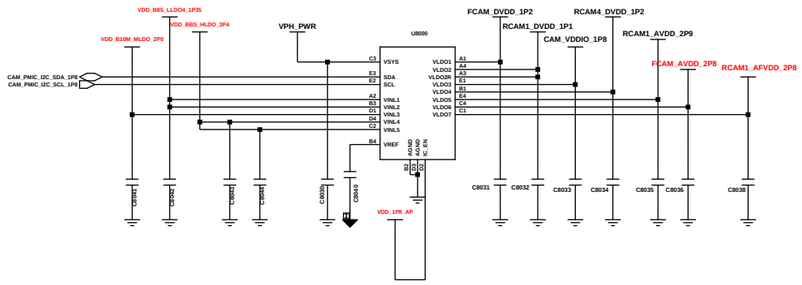

DECO CONTACT

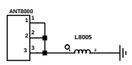

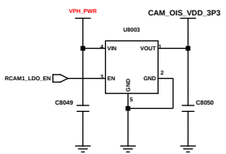

RCAM1_OIS

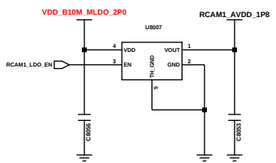

RCAM1_AVDD

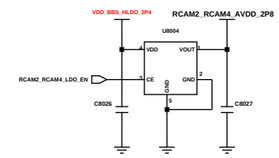

RCAM2_RCAM4_AVDD

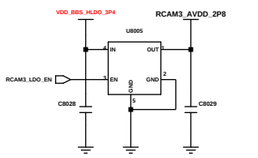

RCAM3_AVDD

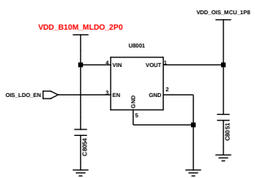

CAM MCU_DVDD

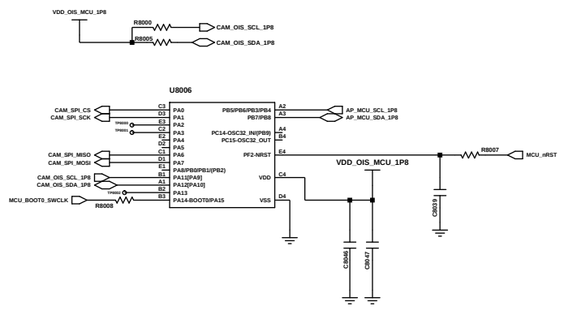

CAM MCU

Engineer:	A33 5G
Drawn by:	
R&D CHK:	TITLE: CAMERA
DOC CTRL CHK:	
MFG ENGR CHK:	
QA CHK:	Changed by: / Date Changed: / Time Changed: / REV / Drawing Number: / Page: 7/8

SAMSUNG CONFIDENTIAL
THIS DOCUMENT CONTAINS CONFIDENTIAL PROPRIETARY INFORMATION THAT IS SAMSUNG ELECTRONICS CO'S PROPERTY. DO NOT DISCLOSE TO OR DUPLICATE FOR OTHERS EXCEPT AS AUTHORIZED BY SAMSUNG.

C2C (Conn to Conn FPCB)

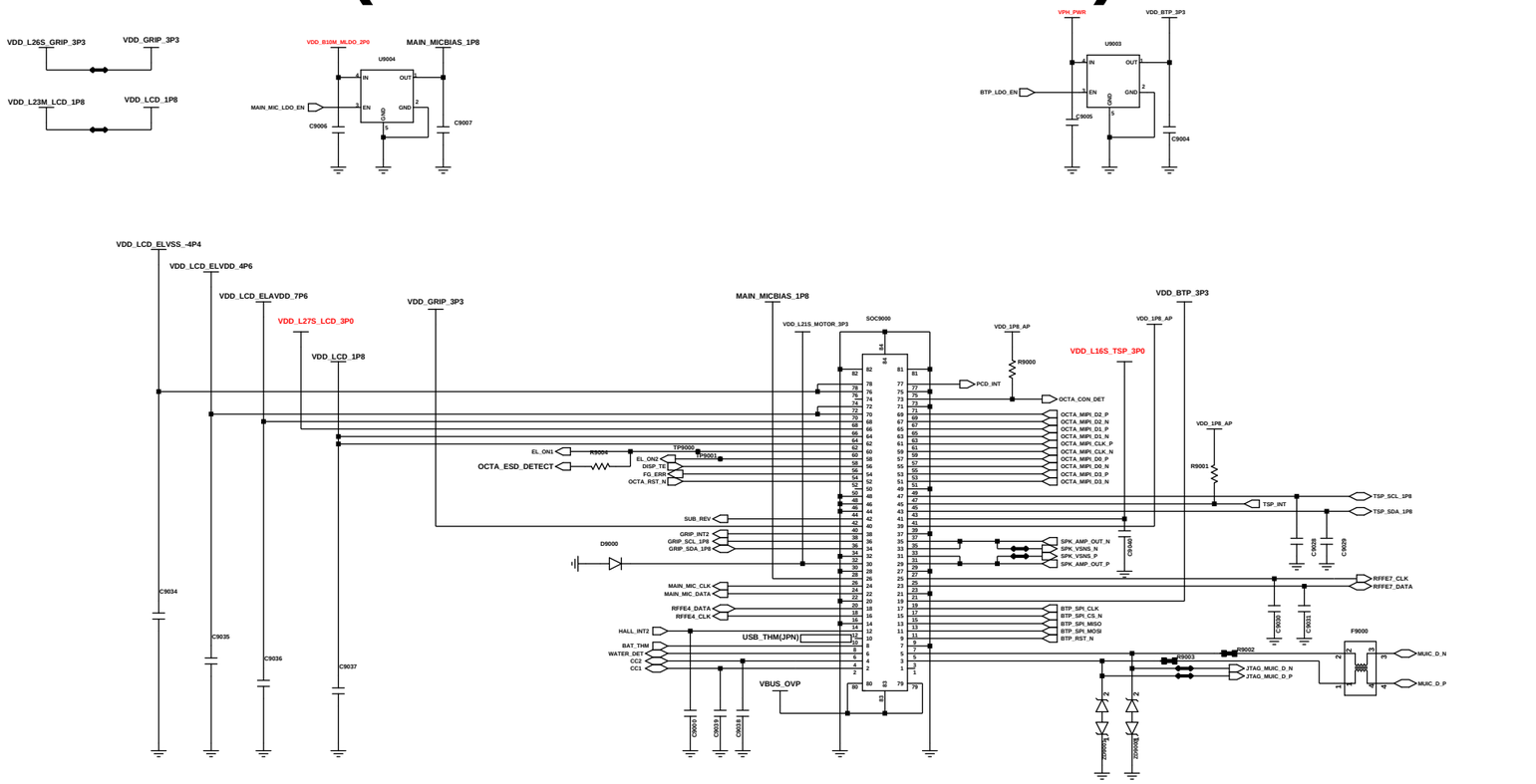

DISPLAY

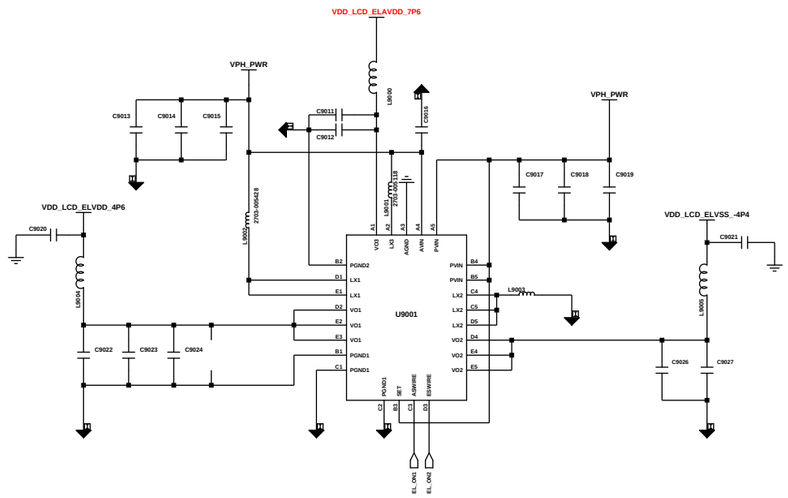

DISPLAY PMIC

BOTH HOLE

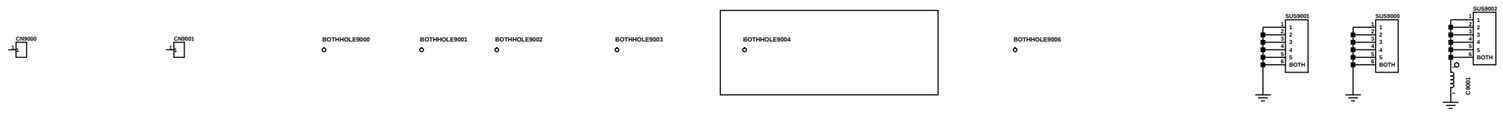

SHIELD CAN

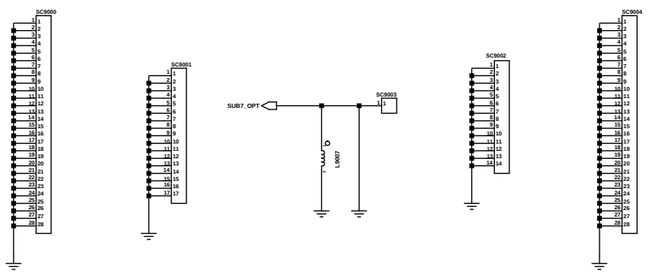

REGION		MEMORY		
R9013 NC	B : EUR	R9017 NC	4/128	
R9014 NC	0 : HK	R9018	6/128	
R9015 NC	N : KOR	R9019 NC	8/128	
R9016 NC	E : SEA, MEA			
R9015	S : SWA			
R9011 NC	M : LA			

Engineer:	A33 5G		
Drawn by:			
R&D CHK:	TITLE: Display	Size:	
DOC CTRL CHK:			
MFG ENGR CHK:			
QA CHK:	REV:	Drawing Number:	Page: 1

Changed by: user28 | Date Changed: Thursday, June 18, 2015 | Time Changed: 10:18:28 am

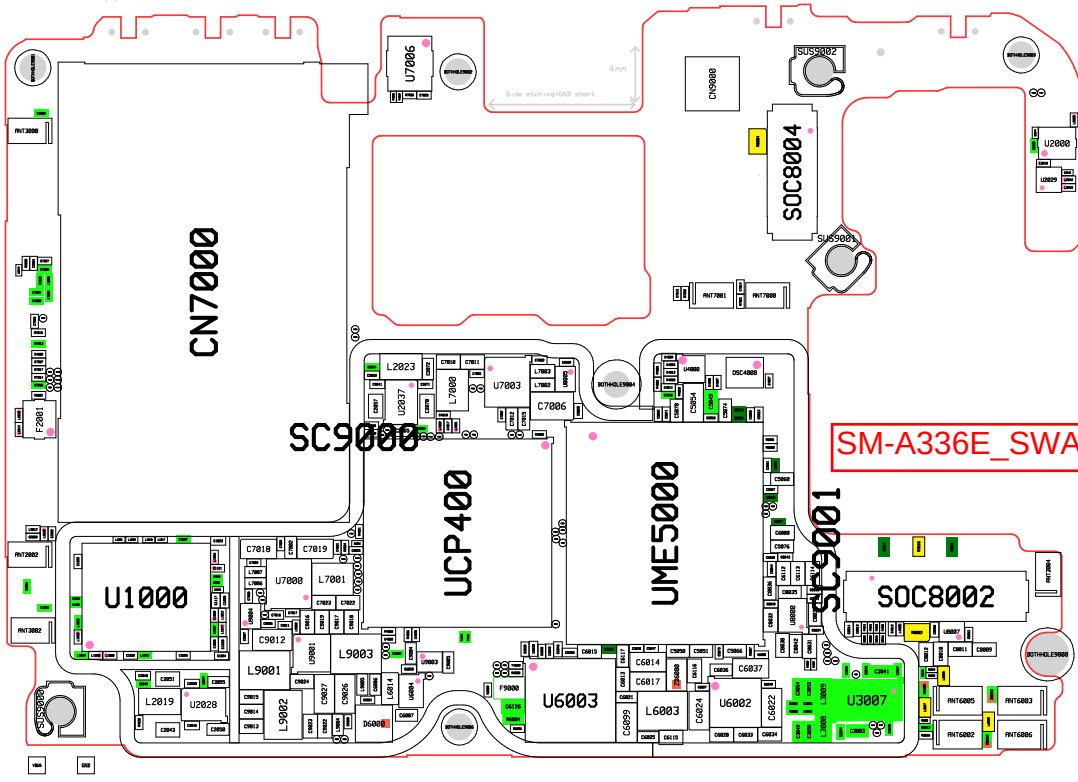
SM-A336E_SWA
CN7000
SC9000
UCP400
UME5000
SC9001
SOC8002
SOC8004
U1000
U6003
U3007
U7006
U2000
CN9000
SUS9002
SUS9001
SUS9000
U7000
L7001
U7003
L7000
L2023
U2037
C7006
C7018
C7019
C9012
L9001
L9003
L9002
L2019
U2028
C6014
C6017
C6037
L6003
U6002
C6022
C6024
C6999
F9000
U6007
U6005
U6006
U6004
U6008
U6009
U6010
U6011
U6012
U6013
U6014
U6015
U6016
U6017
U6018
U6019
U6020
U6021
U6022
U6023
U6024
U6025
U6026
U6027
U6028
U6029
U6030
U6031
U6032
U6033
U6034
U6035
U6036
U6037
U6038
U6039
U6040
U6041
U6042
U6043
U6044
U6045
U6046
U6047

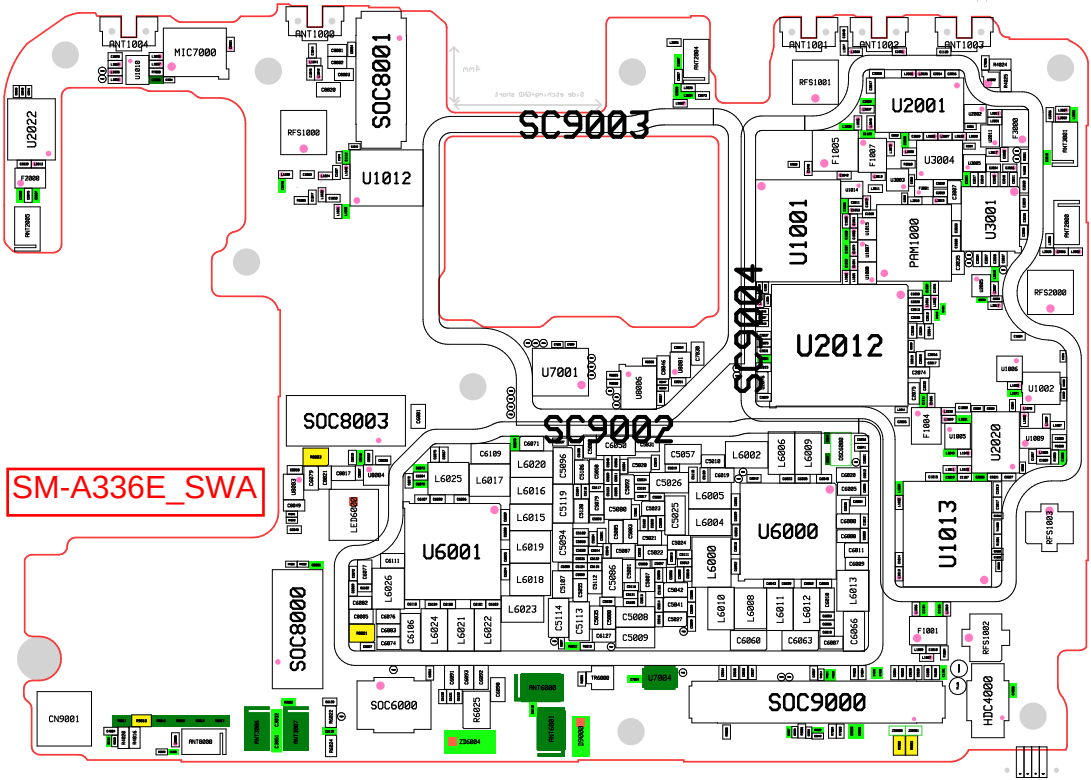
SM-A336E_SWA
SC9003
SC9004
SC9002
SOC8001
SOC8003
SOC8000
SOC6000
SOC9000
MIC7000
U1012
U2022
U2001
U3004
U1001
PRM1000
U3001
U2012
U7001
U1002
U2020
U1013
U6001
U6000
HDC4000
CN9001
ANT1001
ANT1002
ANT1003
ANT1004
RFS1001
RFS1000
RFS2000
RFS1002
F1005
F1007
F3000
F2000
F1004
F1001
U7004
RS825
ANT6000
ANT6001
ANT6002
ANT6003
ANT6004
ANT6005
ANT6006
ANT6007
ANT6008
ANT7000
ANT7001
ANT7002
ANT7003
LED6000
L6025
L6017
L6020
L6016
L6015
L6019
L6018
L6023
L6026
L6024
L6021
L6022
L6002
L6006
L6009
L6005
L6004
L6000
L6010
L6008
L6011
L6012
L6013
C5057
C5026
C5025
C5096
C5119
C5054
C5086
C5113
C5114
C5008
C5009
C6109
C6071
C6060
C6063
C6066
C6106
C6111
C6127
C6126
C6004
C6005
C6006
C6007
C6008
C6009
C6010
C6011
C6012
C6013
C6014
C6015
C6016
C6017
C6018
C6019
C6020
C6021
C6022
C6023
C6024
C6025
C6026
C6027
C6028
C6029
C6030
C6031
C6032
C6033
C6034
C6035
C6036
C6037
C6038
C6039
C6040
C6041
C6042
C6043

SAMSUNG CONFIDENTIAL
THIS DOCUMENT CONTAINS CONFIDENTIAL
PROPRIETARY INFORMATION THAT IS
SAMSUNG ELECTRONICS CO'S PROPERTY.
DO NOT DISCLOSE TO OR DUPLICATE FOR OTHERS
EXCEPT AS AUTHORIZED BY SAMSUNG.

A33 5G REV0.3A

SM-A336M

2021.12.06

Sheet01 : GSM / WCDMA / LTE / NR(N41) RF
Sheet02 : TRANSCEIVER, SUB ANT
Sheet03 : CONNECTIVITY(BT/WIFI/FM), NFC
Sheet04 : AP(PAPAYA-INTERFACE,GPIO)
Sheet05 : AP(POWER), MEM(uMCP)
Sheet06 : PMIC/SUB PMIC, IF PMIC
Sheet07 : AUDIO Codec, SENSOR, SIM, SD
Sheet08 : CAMERA
Sheet09 : DISPLAY PMIC, C2C

SAMSUNG CONFIDENTIAL
THIS DOCUMENT CONTAINS CONFIDENTIAL
AND PROPRIETARY INFORMATION OF
SAMSUNG ELECTRONICS CO. LTD. PROPERTY.
DO NOT DISCLOSE TO OR DUPLICATE FOR OTHERS
EXCEPT AS AUTHORIZED BY SAMSUNG.

RF PART 1

MAIN ANT1 LB

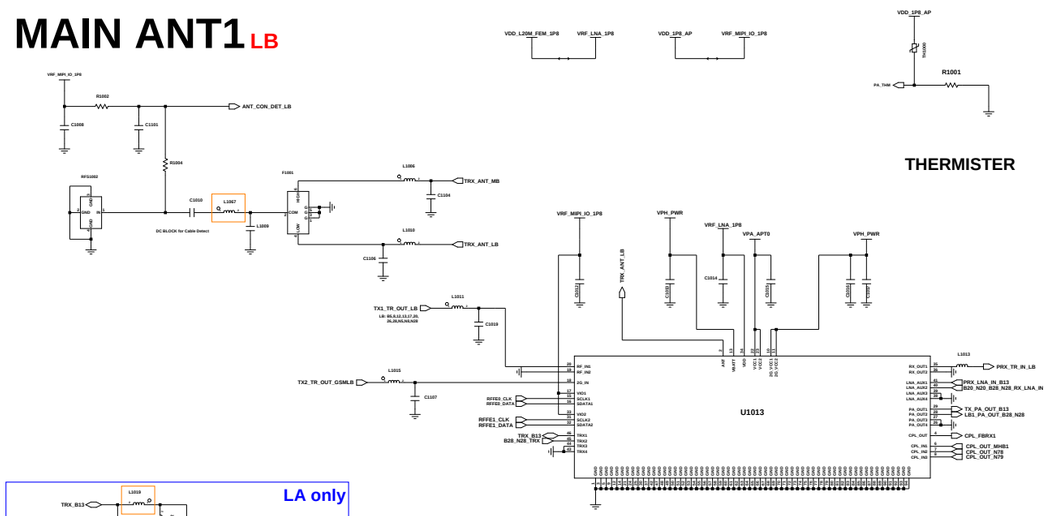

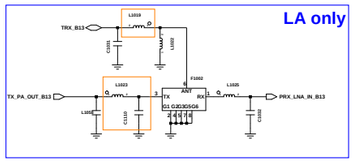

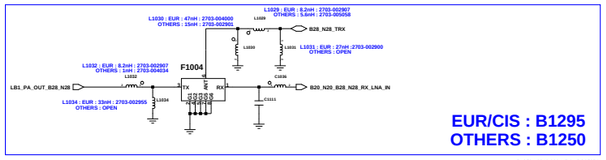

MAIN ANT2

MHB, n78/79 DRX

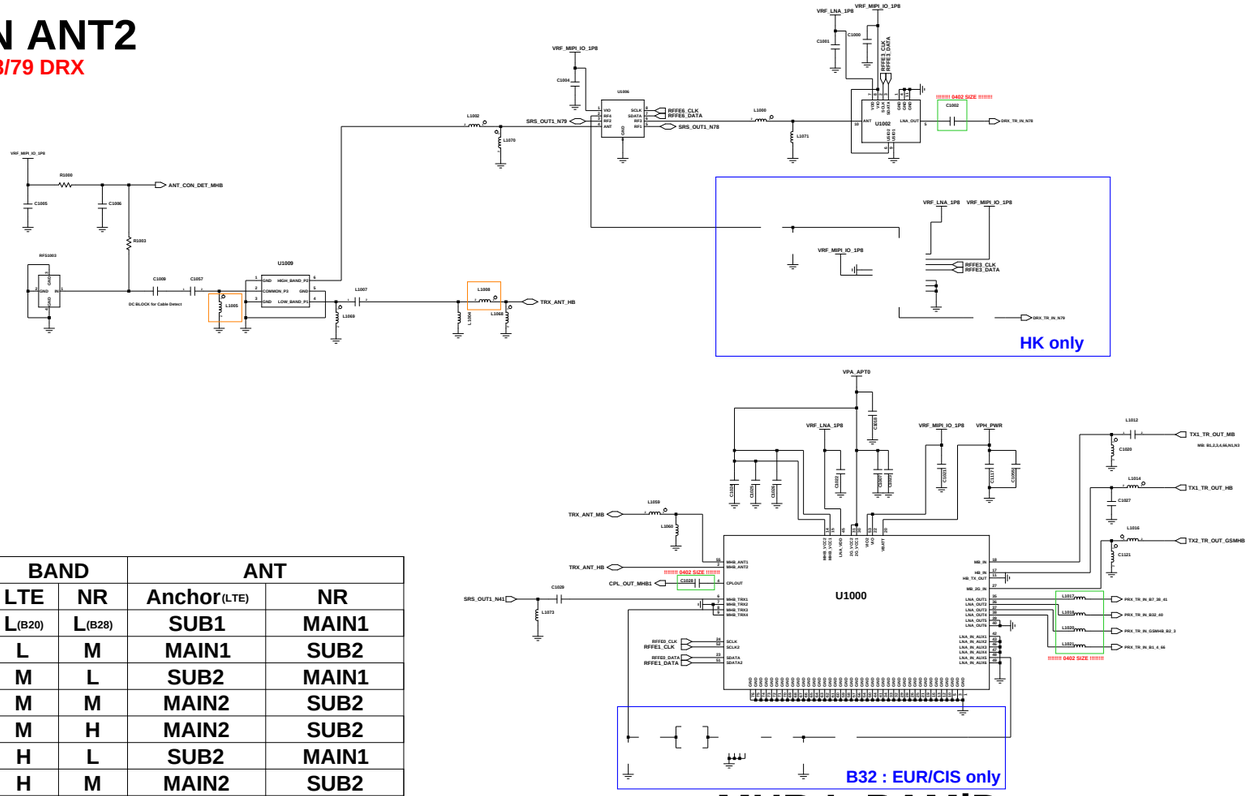

BAND		ANT	
LTE	NR	Anchor(LTE)	NR
L(B20)	L(B28)	SUB1	MAIN1
L	M	MAIN1	SUB2
M	L	SUB2	MAIN1
M	M	MAIN2	SUB2
M	H	MAIN2	SUB2
H	L	SUB2	MAIN1
H	M	MAIN2	SUB2
L/M/H	UHB	MAIN	SUB

MHB L-PAMiD

SUB ANT1

LB
HB MIMO

EUR/CIS : QDM3525
OTHERS : SFML5E0K001

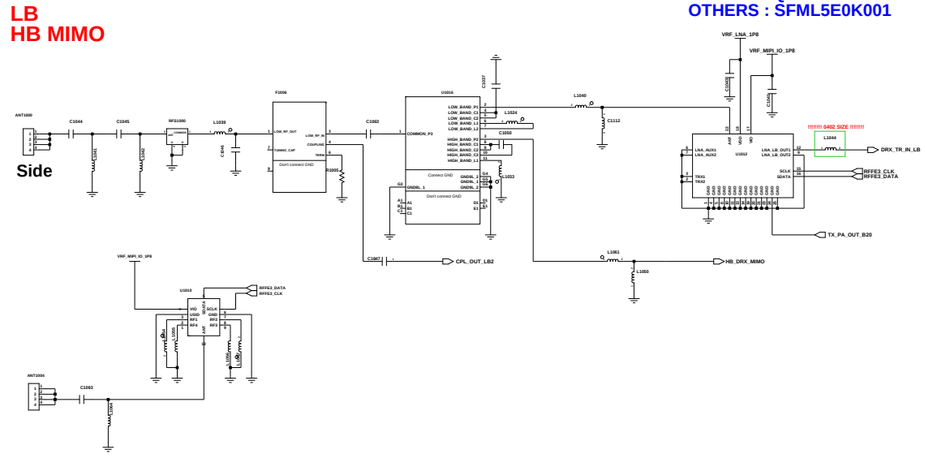

SUB ANT2

GPS, MHB, WiFi 2.4G

KOR : not support

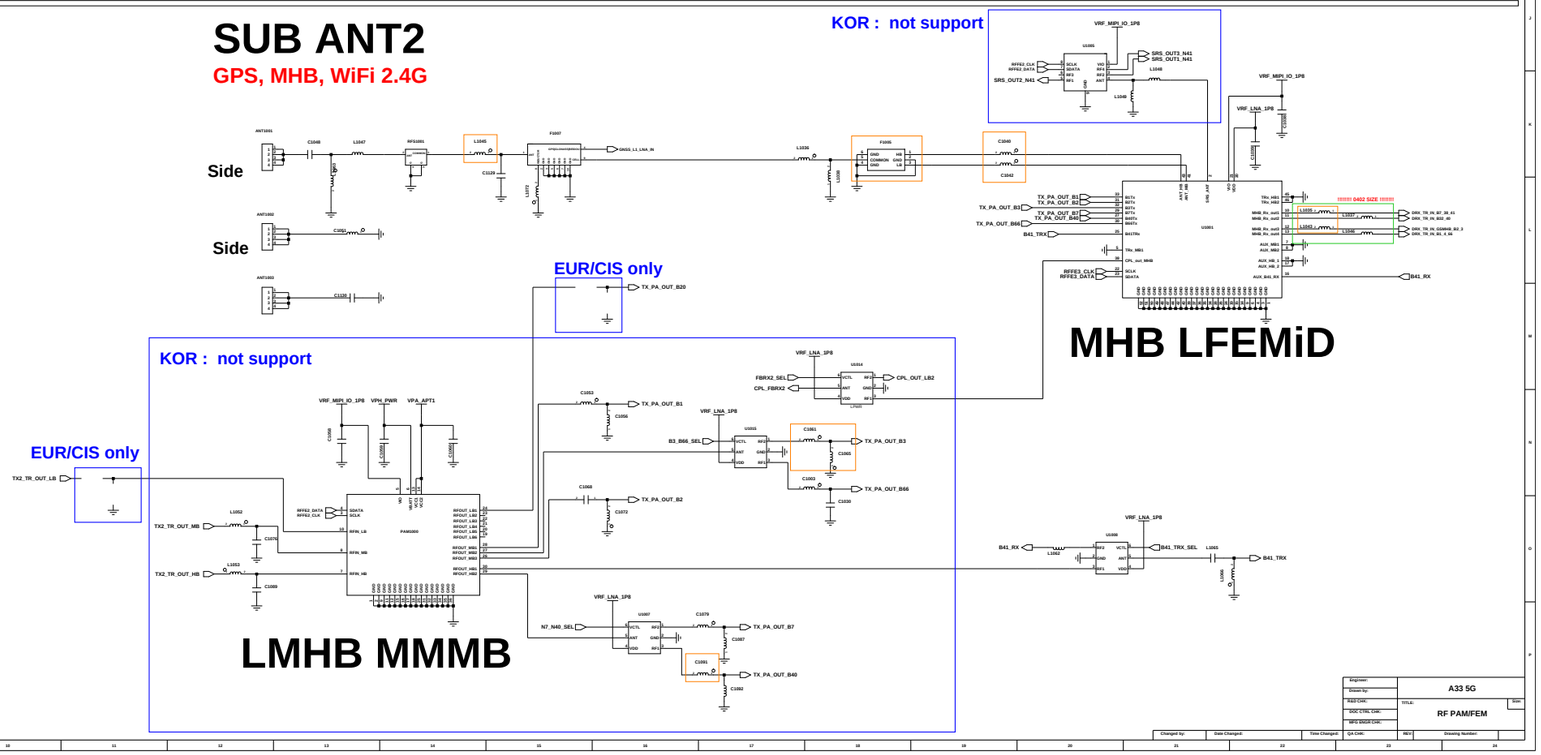

MHB LFEMiD

LMHB MMMB

Engineer:	A33 5G
Drawn by:	
R&D CHK:	TITLE: RF PAM/FEM
DOC CTRL CHK:	
SPD SOCR CHK:	
QA CHK:	REV / Drawing Number:

Changed by: | Date Changed: | Time Changed:

SAMSUNG CONFIDENTIAL
THIS DOCUMENT CONTAINS CONFIDENTIAL
AND PROPRIETARY INFORMATION OF
SAMSUNG ELECTRONICS CO. LTD.
DO NOT DISCLOSE TO OR DUPLICATE FOR OTHERS
EXCEPT AS AUTHORIZED BY SAMSUNG.

TRANSCEIVER (S5511)

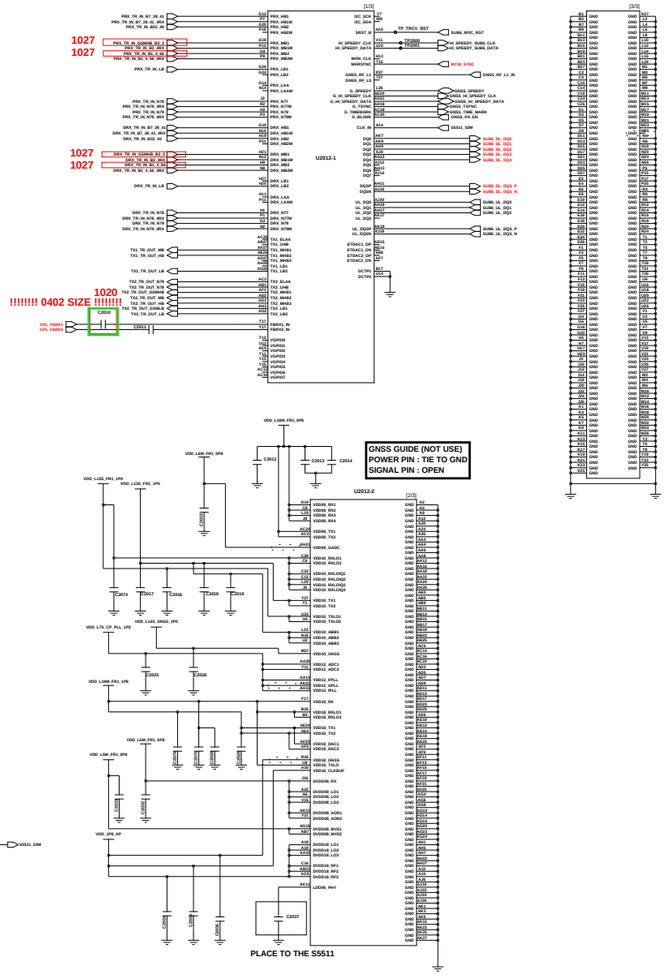

APT0

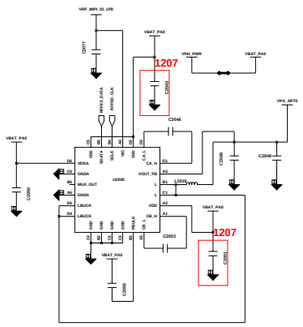

APT1

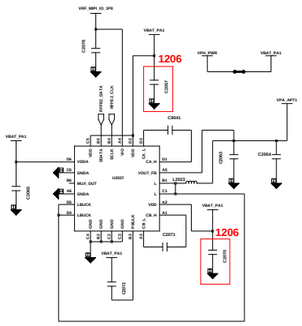

SUB ANT7

n78/79 PRX MIMO

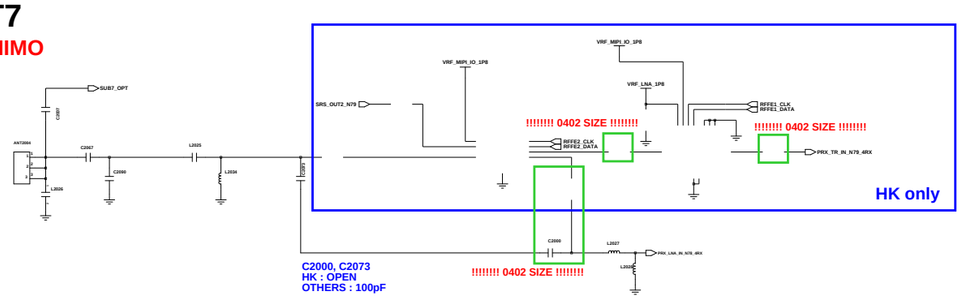

SUB ANT4

N78/79 TRX

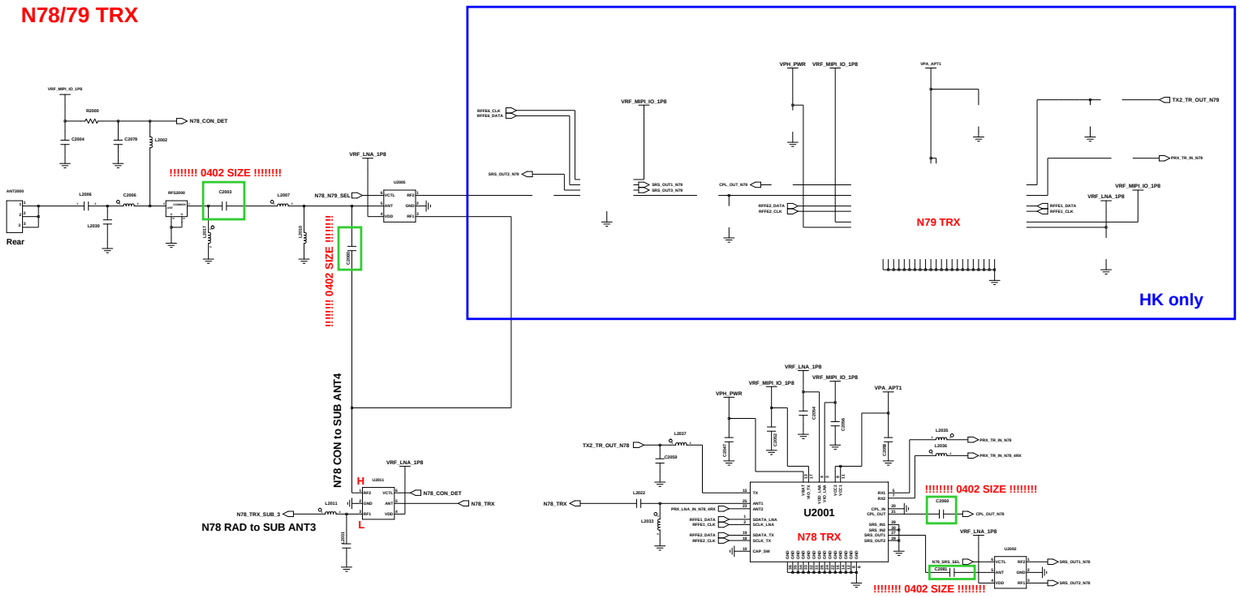

SUB ANT5

MHB MIMO

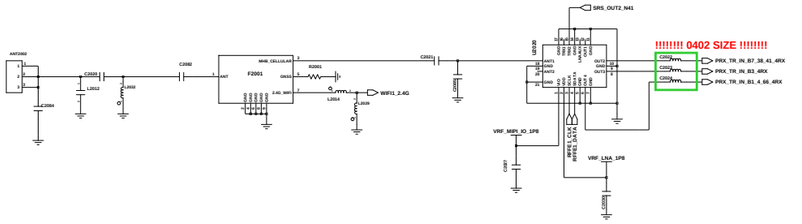

SUB ANT6

n78/79 DRX MIMO
MB MIMO

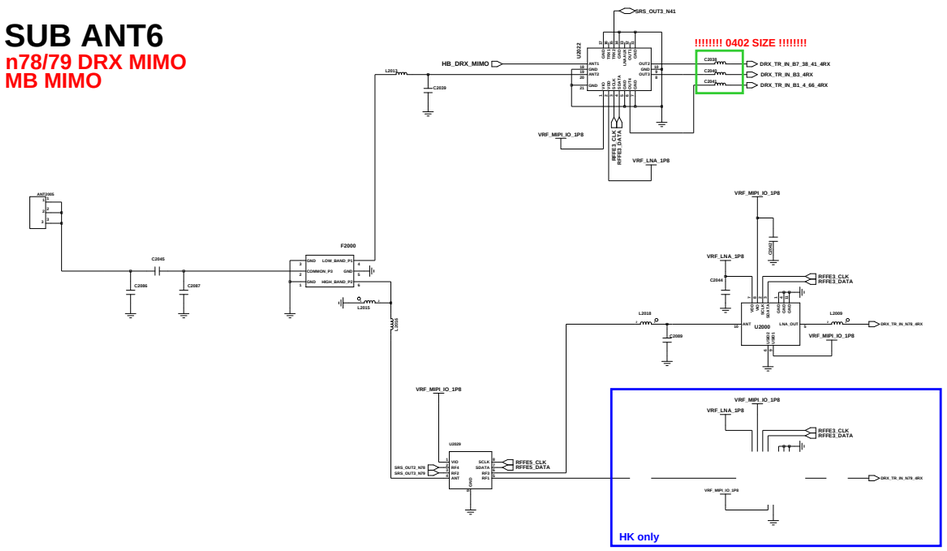

Engineer:	A33 5G
Initiator by:	
PAD Coll.:	TITLE: RF TRCV/PAM/APT
SDC & FML Coll.:	
MFG Vendor Coll.:	
QA Coll.:	Drawing Number:

SAMSUNG CONFIDENTIAL
THIS DOCUMENT CONTAINS CONFIDENTIAL
PROPRIETARY INFORMATION THAT IS
SAMSUNG ELECTRONICS CO'S PROPERTY.
DO NOT DISCLOSE TO OR DUPLICATE FOR OTHERS
EXCEPT AS AUTHORIZED BY SAMSUNG.

WIFI/BT/FM

SUB ANT3

WiFi 5G, N78 TRX

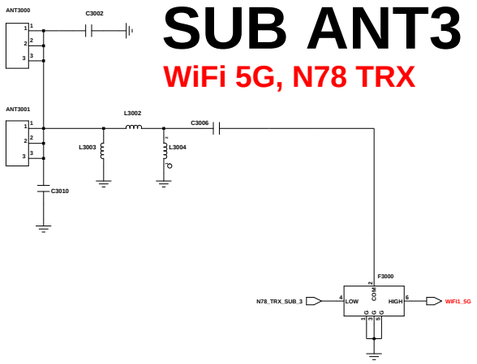

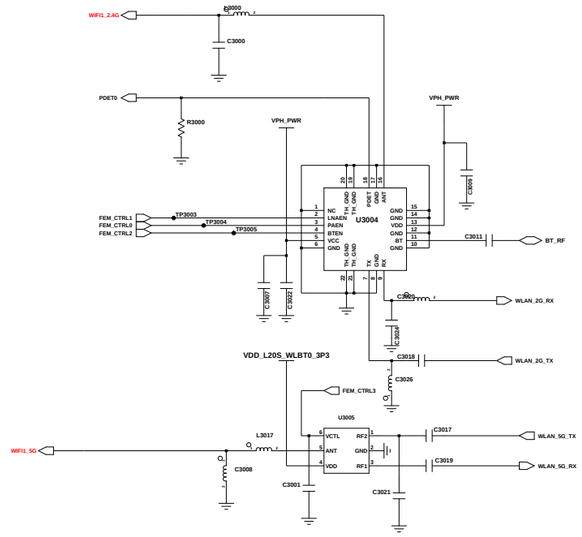

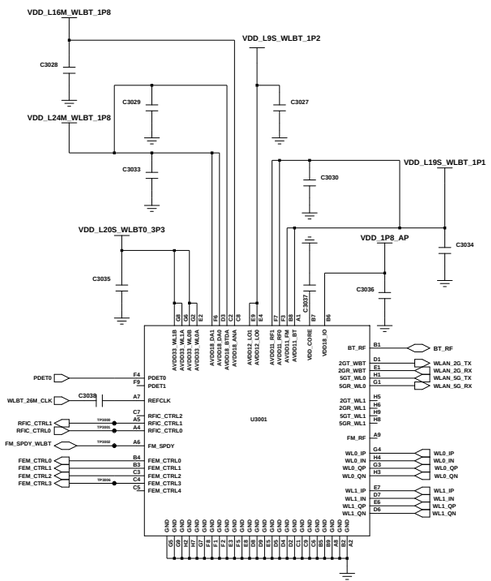

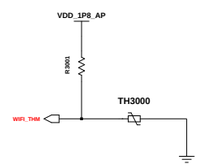

GPS L1 / GNSS/BEIDOU

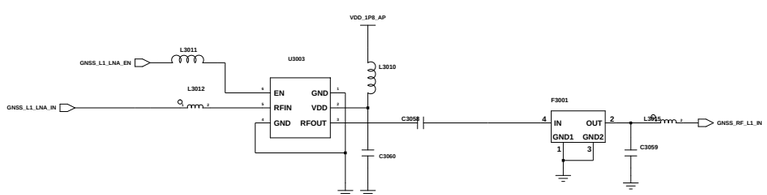

MST

use 106 internal function

GND CCP

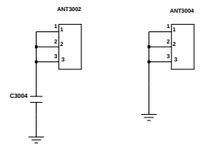

NFC

UICC ONLY / SWA not support

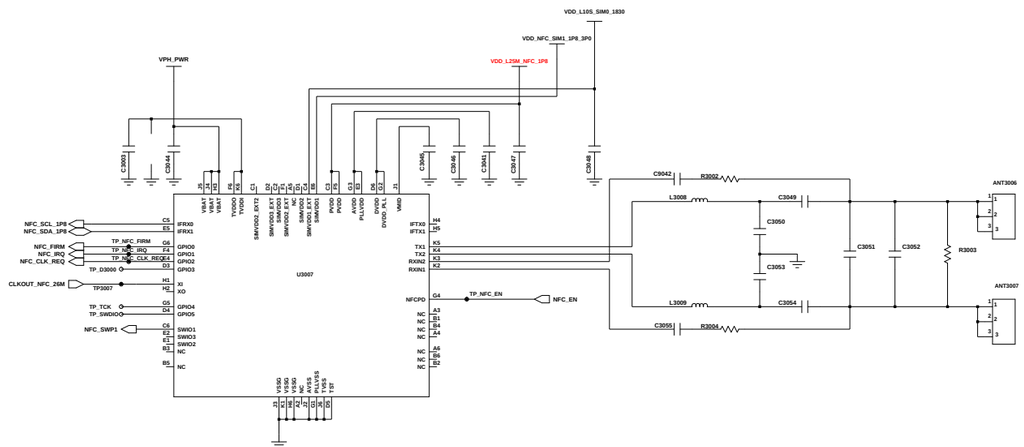

Engineer:			
Drawn by:			A33 5G
R&D CHK:		TITLE:	Size:
DOC CTRL CHK:			WIFI/NFC/MST/GPS
MFG ENGR CHK:			
QA CHK:	Changed by: user118 / Date Changed: / Time Changed:	REV	Drawing Number: / Page: 3

SAMSUNG CONFIDENTIAL
THIS DOCUMENT CONTAINS CONFIDENTIAL
AND PROPRIETARY INFORMATION OF
SAMSUNG ELECTRONICS CO'S PROPERTY.
DO NOT DISCLOSE TO OR DUPLICATE FOR OTHERS
EXCEPT AS AUTHORIZED BY SAMSUNG.

PAPAYA

UCP400-1

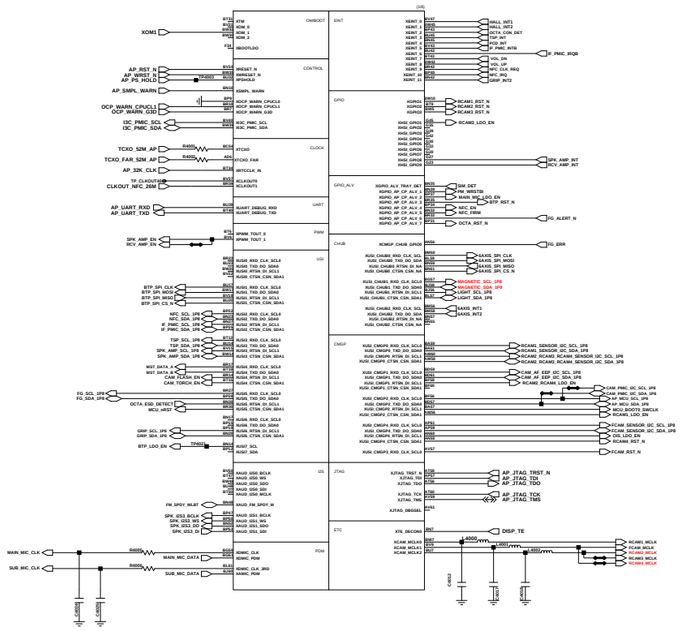

UCP400-2

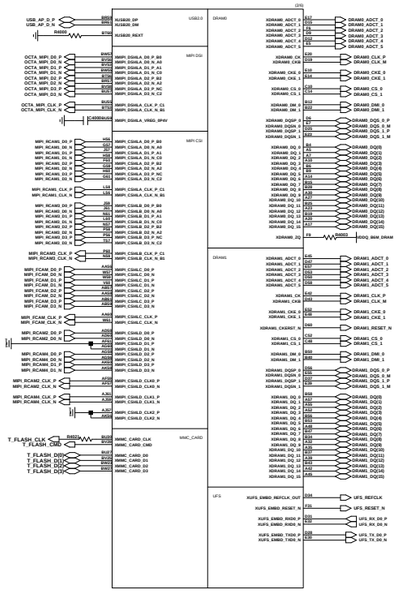

UCP400-3

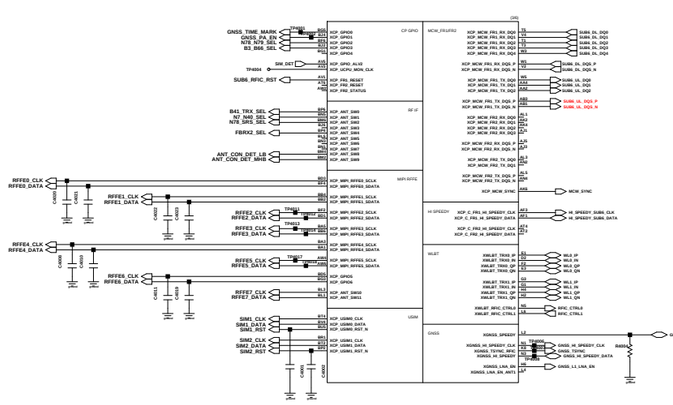

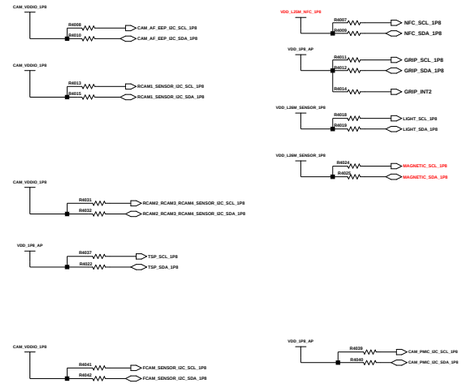

AP HW REV

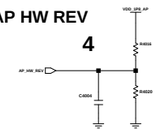

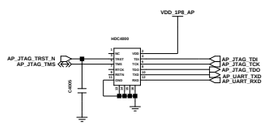

AP JTAG

PIN [3:1]	Function	
OM[2:0]	1st Boot	2nd Boot
000	UFS	USB
001	-----	USB
010	USB	-----
100	SD	USB

iROM BOOT

REV	R1(Kohm)	R2(Kohm)	AP	
0	NC	0	BRINGUP	
1	430	30	R00	
2	390	62	R01	
3	360	91	R02	
4	330	120	R03/R03A	1206
5	300	150		
6	270	180		
7	240	220		
8	200	240		
9	180	270		
10	160	300		
11	120	330		
12	91	360		
13	62	390		
14	30	430		
15	10	NC		

SYSTEM CLOCK

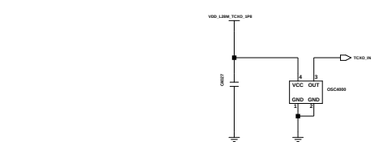

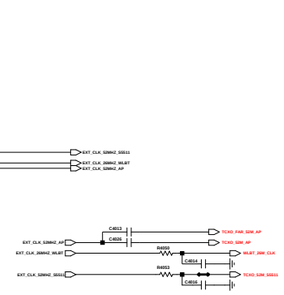

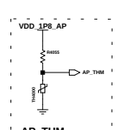

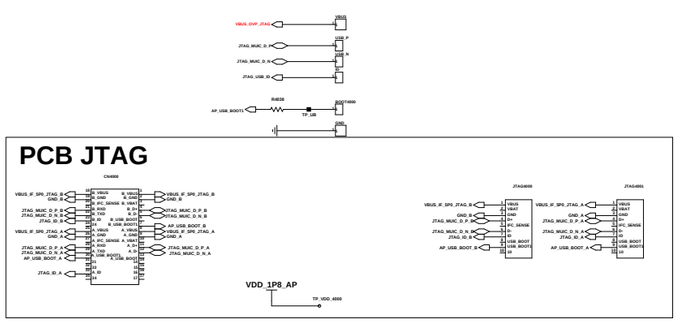

PCB JTAG

Engineer:	A33 5G
Hardware Kyo	
Software Kyo	
ASIC Unit:	TITLE:
DOC CTRL Unit:	2020_100916
MFG DAQA Unit:	

Changed by	Date Changed	Time Changed	QA Unit:	ECO:	Drawing Number:	Page
	Friday, September 18, 2020	3:45:31 PM				2 of 30

SAMSUNG CONFIDENTIAL
THIS DOCUMENT CONTAINS CONFIDENTIAL PROPRIETARY INFORMATION THAT IS SAMSUNG ELECTRONICS CO'S PROPERTY. DO NOT DISCLOSE TO OR DUPLICATE FOR OTHERS EXCEPT AS AUTHORIZED BY SAMSUNG.

UCP400-4

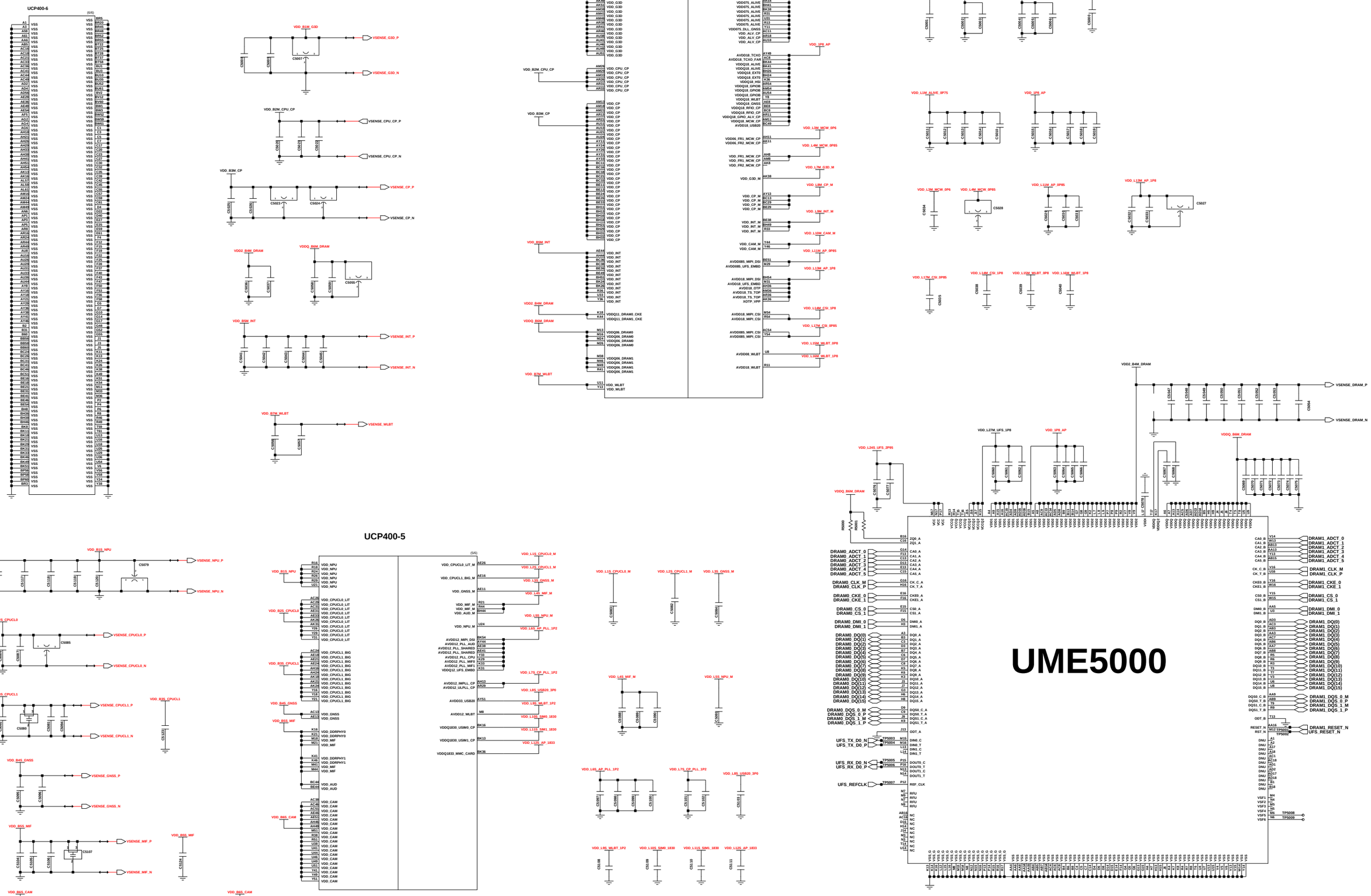

Engineer:	A33 5G
Drawn by:	
R&D CHK:	TITLE: AP/CP/uMCP
DOC CTRL CHK:	Size:
MFG ENGR CHK:	
QA CHK:	REV / Drawing Number: / Page:

Changed by: | Date Changed: | Time Changed:

SAMSUNG CONFIDENTIAL
THIS DOCUMENT CONTAINS CONFIDENTIAL
AND PROPRIETARY INFORMATION OF
SAMSUNG ELECTRONICS CO'S PROPERTY.
DO NOT DISCLOSE TO OR DUPLICATE FOR OTHERS
EXCEPT AS AUTHORIZED BY SAMSUNG.

IF PMIC(S2MU106)

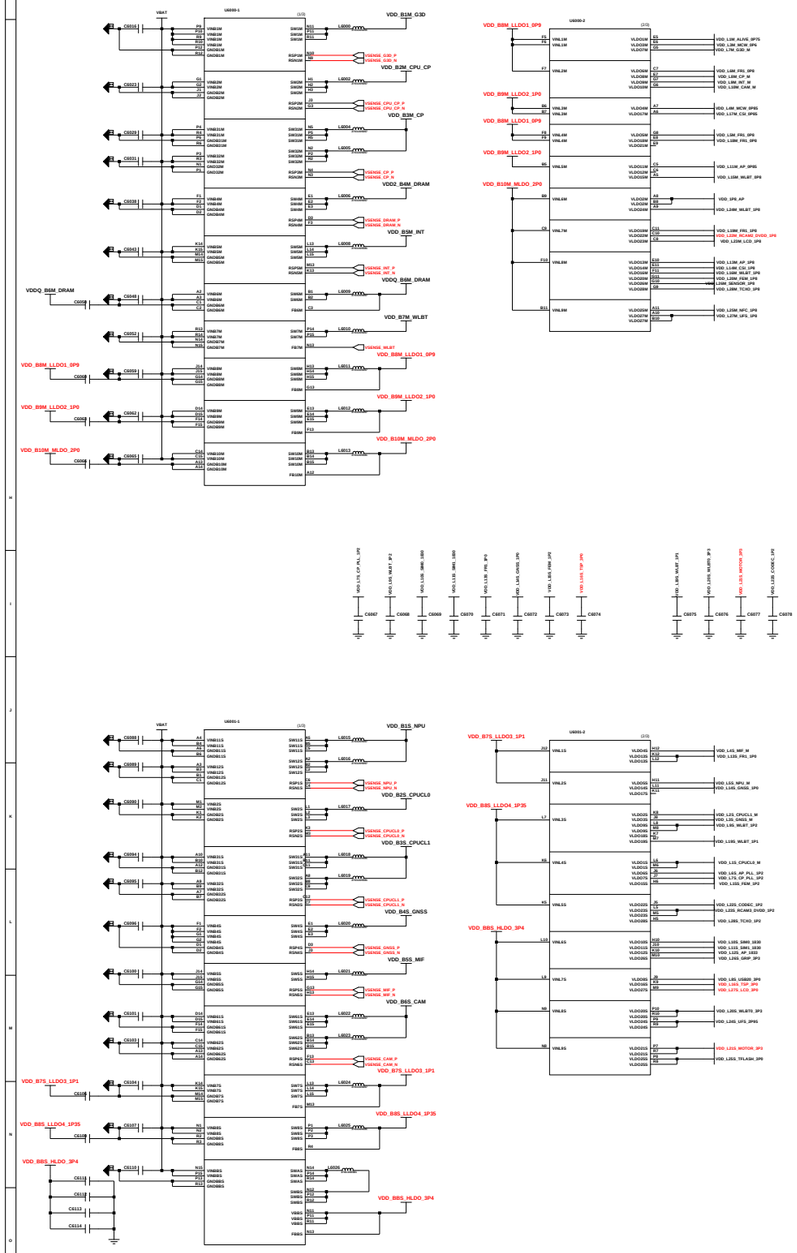

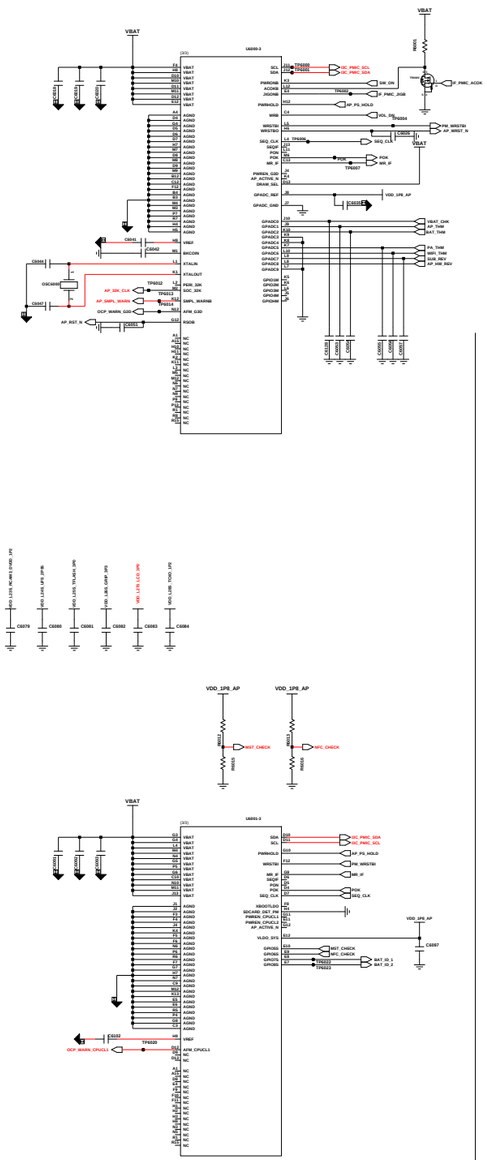

DIRECT CHARGER (SM5451)

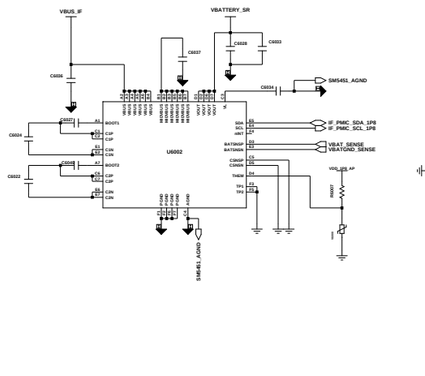

OVP

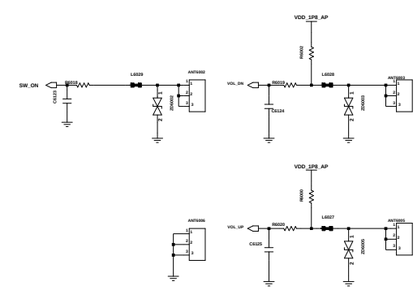

POWER & VOL KEY

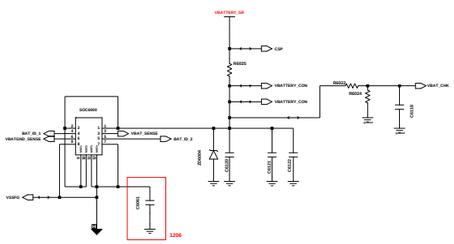

BATTERY CON

Engineer:	A33 5G
Drawn by:	
R&D CHK:	TITLE: POWER/MOT/KEY
SOC CTRL CHK:	
IF PMIC CHK:	
QA CHK:	

Changed by | Date Changed | Time Changed | REV | Drawing Number

SAMSUNG CONFIDENTIAL
THIS DOCUMENT CONTAINS CONFIDENTIAL PROPRIETARY INFORMATION THAT IS SAMSUNG ELECTRONICS CO'S PROPERTY. DO NOT DISCLOSE TO OR DUPLICATE FOR OTHERS EXCEPT AS AUTHORIZED BY SAMSUNG.

AUDIO & SENSOR PART

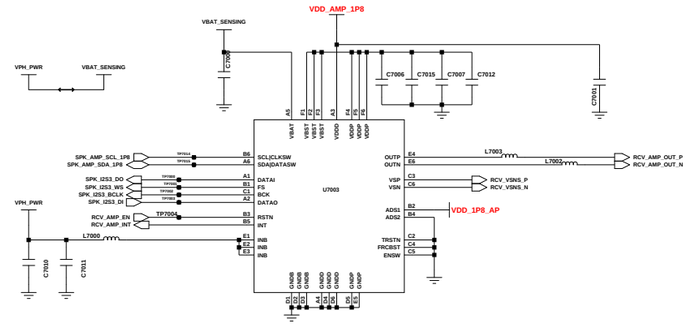

RCV AMP

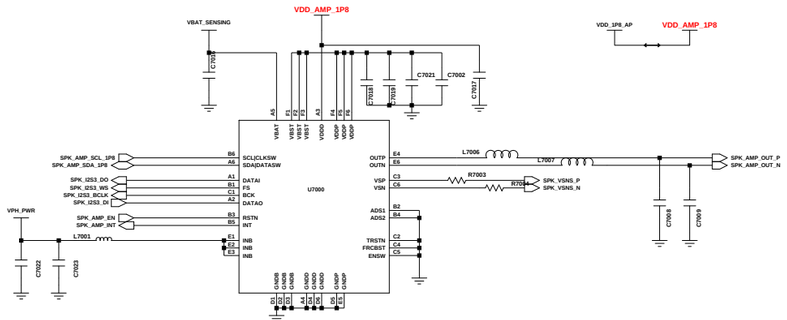

SPK AMP

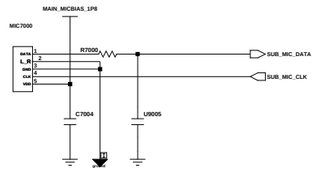

2nd MIC

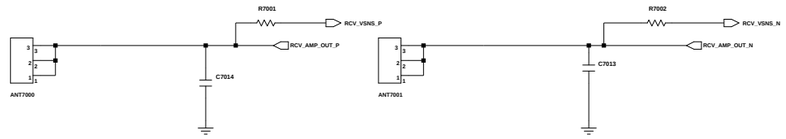

RCV CONTACT

DUAL SIM / T-FLASH (3in2)

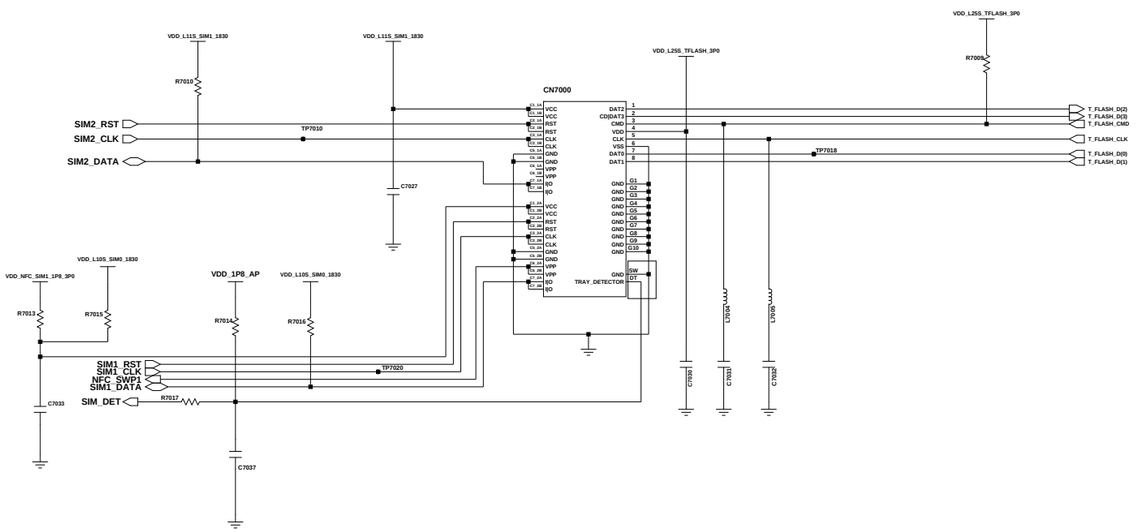

SENSOR

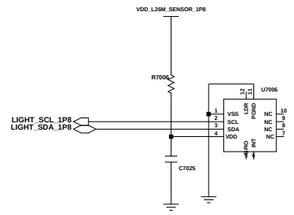

AMBIENT SENSOR

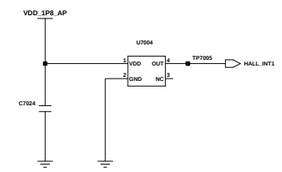

HALL IC

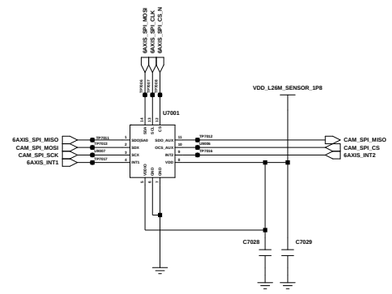

ACC&GYRO SENSOR

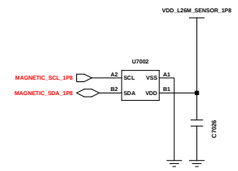

MAGNETIC SENSOR

Engineer:			
Drawn by:			
R&D CHK:	TITLE: A33 5G		Size:
DOC CTRL CHK:			
MFG ENGR CHK:			
Changed by:	Date Changed:	Time Changed:	QA CHK:

REV	Drawing Number:	Page:

SAMSUNG CONFIDENTIAL
THIS DOCUMENT CONTAINS CONFIDENTIAL
PROPRIETARY INFORMATION THAT IS
SAMSUNG ELECTRONICS CO'S PROPERTY.
DO NOT DISCLOSE TO OR DUPLICATE FOR OTHERS
EXCEPT AS AUTHORIZED BY SAMSUNG.

CAMERA

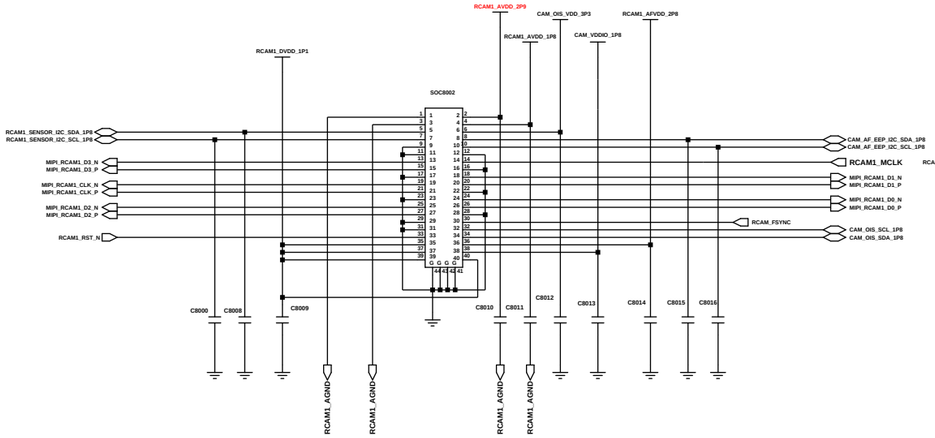

RCAM1_48M OIS(40PIN)

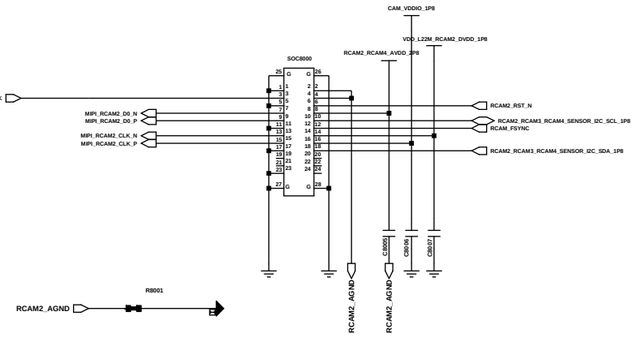

RCAM2_2M_BOKEH_CAMERA(24PIN)

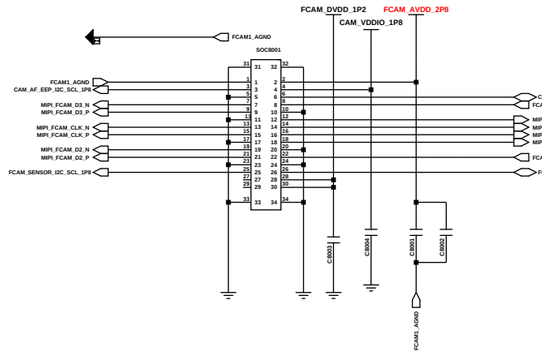

FRONT_13M CAMERA (30PIN)

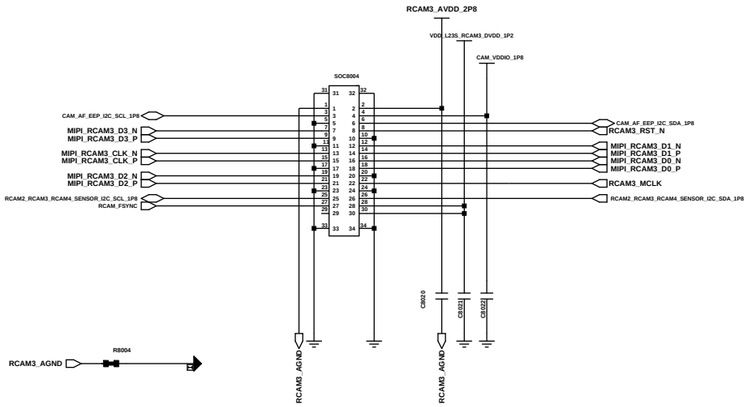

RCAM3_SUPER WIDE_8M CAMERA(30pin)

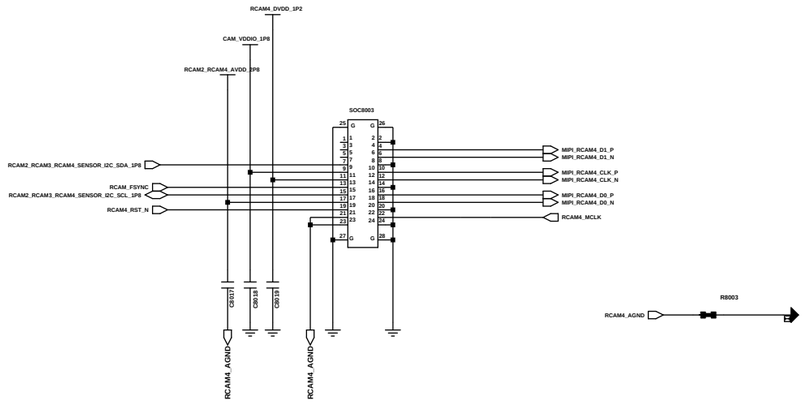

RCAM4_5M_MACRO_CAMERA(24PIN)

CAM PMIC

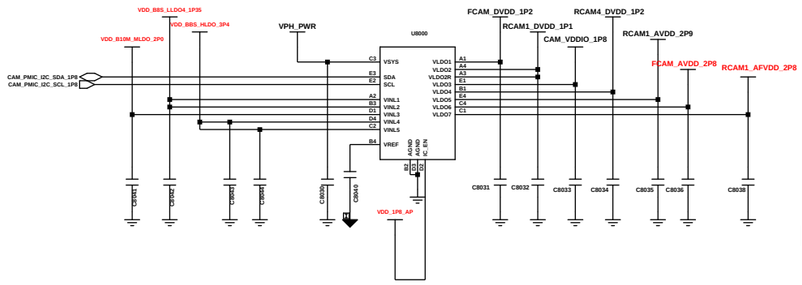

DECO CONTACT

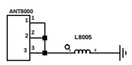

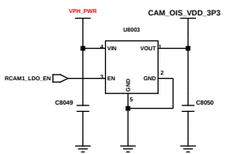

RCAM1_OIS

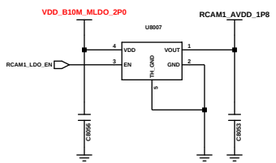

RCAM1_AVDD

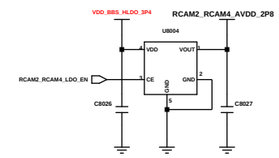

RCAM2_RCAM4_AVDD

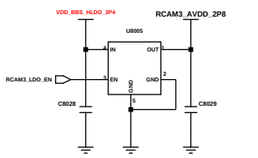

RCAM3_AVDD

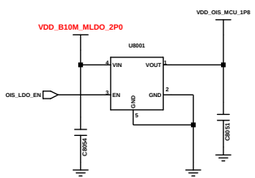

CAM MCU_DVDD

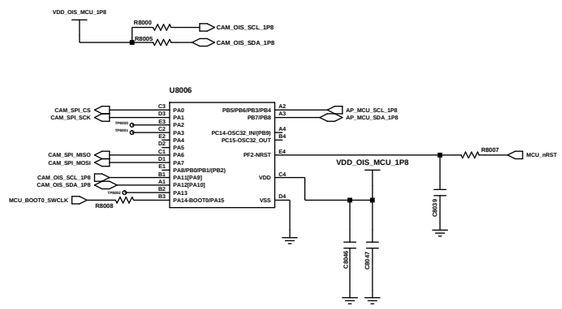

CAM MCU

Engineer:	A33 5G
Drawn by:	
R&D CHK:	TITLE: CAMERA
DOC CTRL CHK:	
MFG ENGR CHK:	
QA CHK:	Changed by: / Date Changed: / Time Changed: / REV / Drawing Number: / Page: 7/8

SAMSUNG CONFIDENTIAL
THIS DOCUMENT CONTAINS CONFIDENTIAL PROPRIETARY INFORMATION THAT IS SAMSUNG ELECTRONICS CO'S PROPERTY. DO NOT DISCLOSE TO OR DUPLICATE FOR OTHERS EXCEPT AS AUTHORIZED BY SAMSUNG.

C2C (Conn to Conn FPCB)

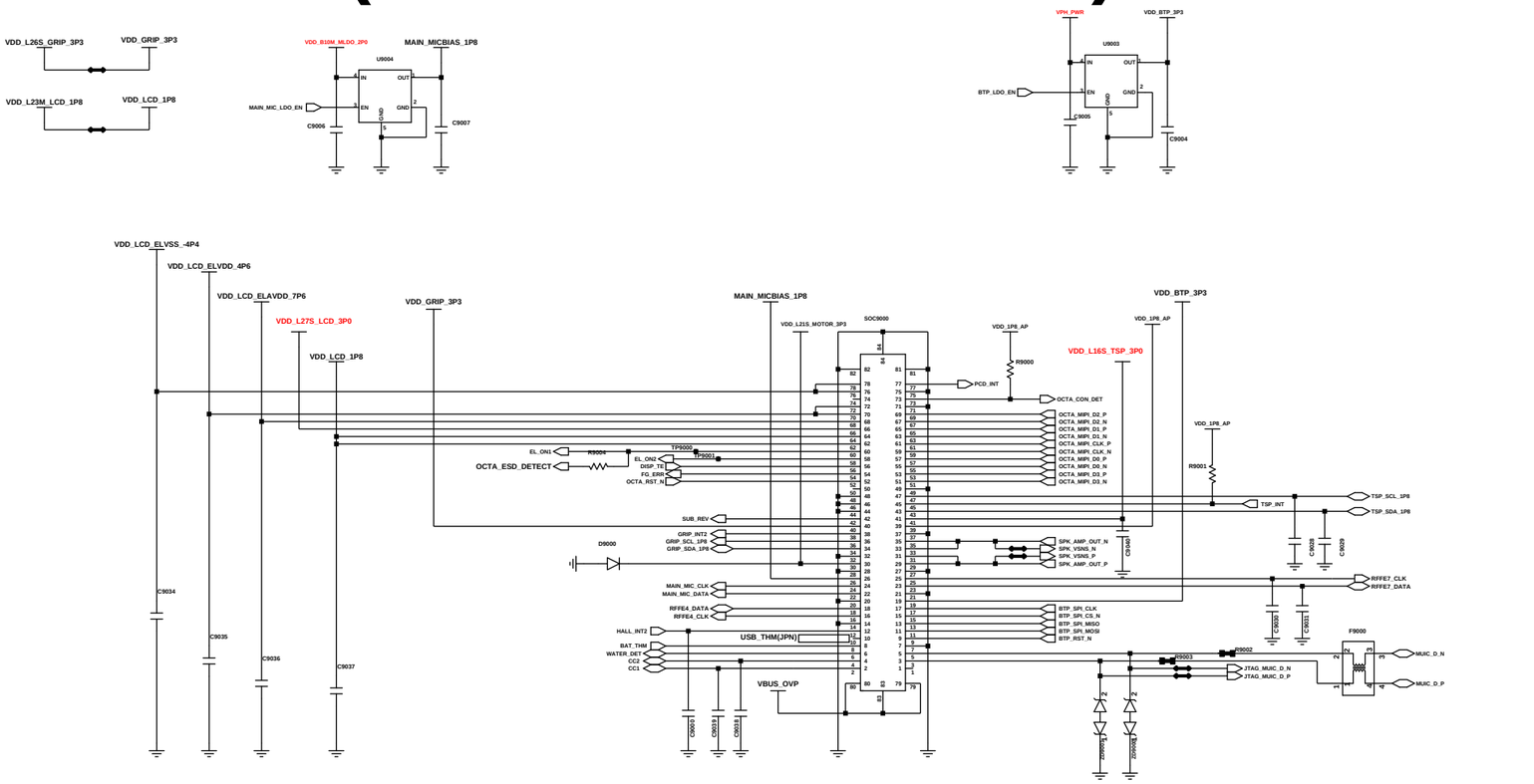

BOTH HOLE

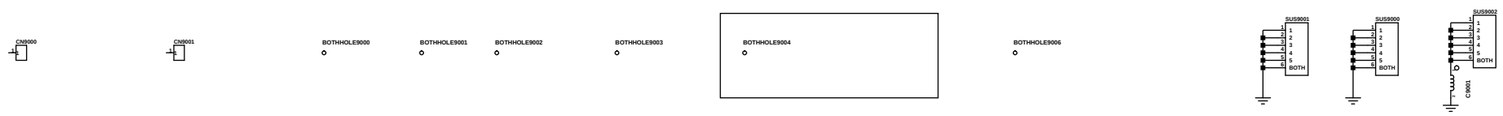

SHIELD CAN

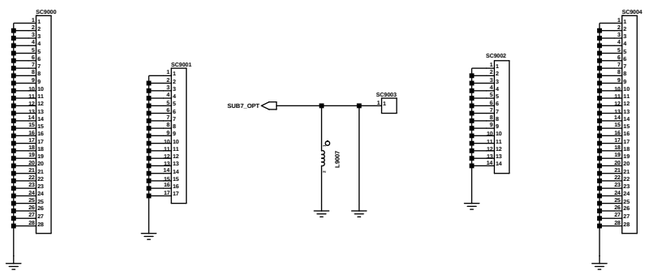

REGION		MEMORY		
R9013 NC	B : EUR	R9017 NC	4/128	
R9014 NC	0 : HK	R9018	6/128	
R9015 NC	N : KOR	R9019 NC	8/128	
R9016 NC	E : SEA, MEA			
R9019 NC	S : SWA			
R9013	M : LA			

DISPLAY

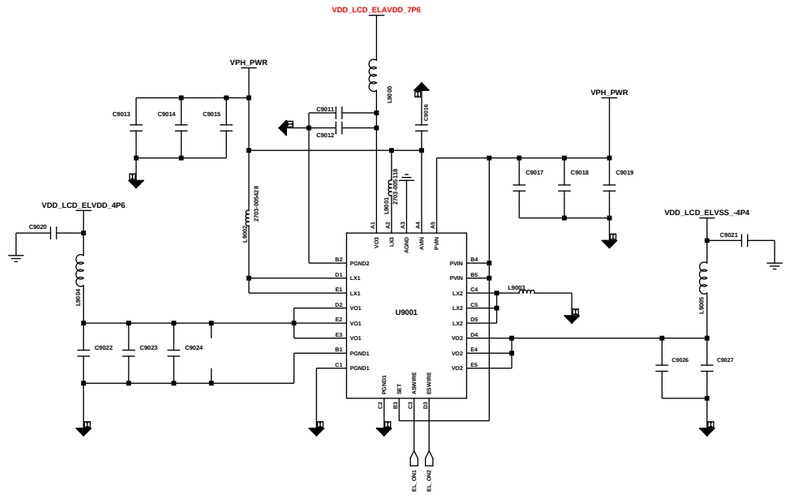

DISPLAY PMIC

Engineer:	A33 5G
Drawn by:	
R&D CHK:	TITLE: Display
DOC CTRL CHK:	
MFG ENGR CHK:	
QA CHK:	REV: Drawing Number: Page:

Changed by: user28 | Date Changed: Thursday, June 18, 2015 | Time Changed: 10:18:28 am

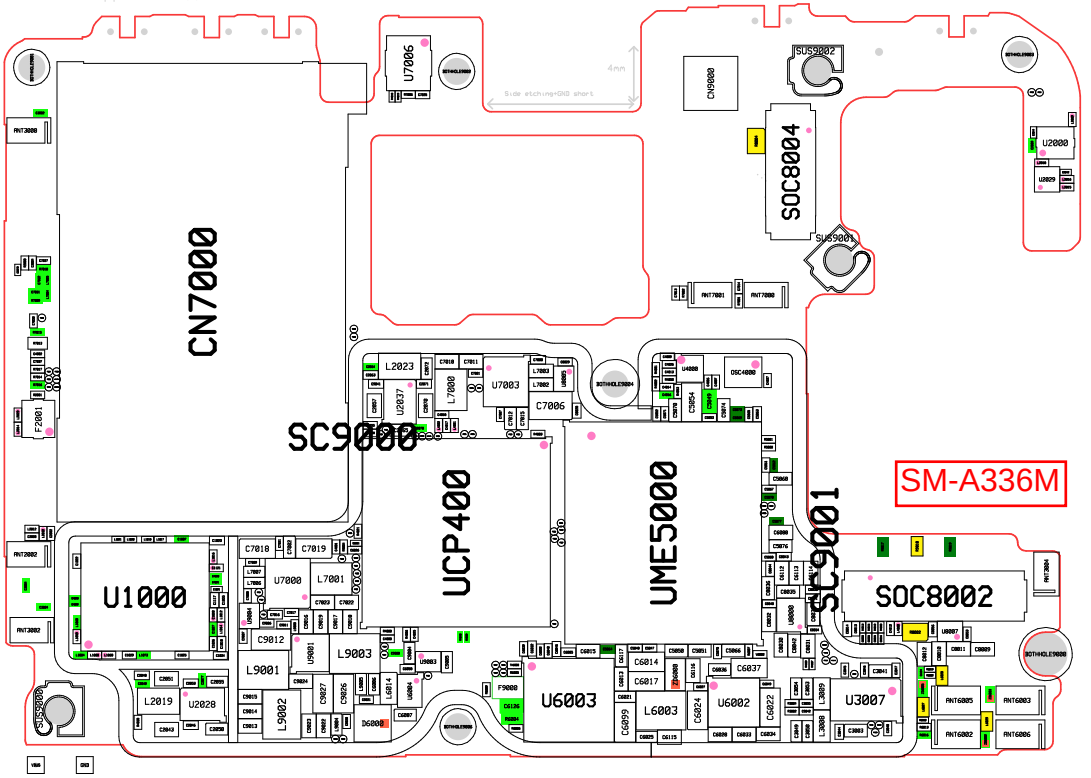
CN7000
SC9000
UCP400
UME5000
SC9001
SOC8002
SOC8004
U1000
U6003
U3007
U6002
U7006
U2000
CN9000
SM-A336M

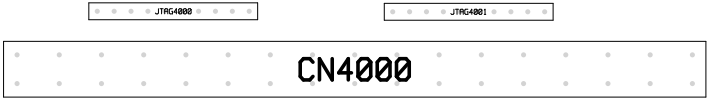
JTAG4000
JTAG4001
CN4000

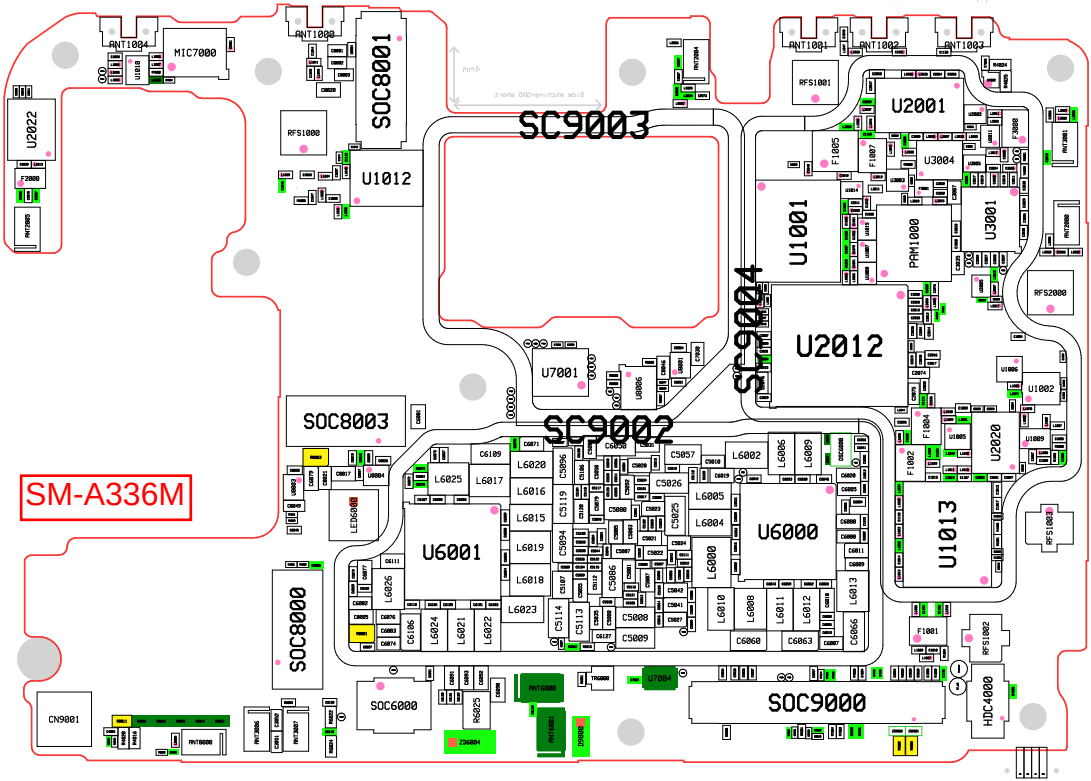
SM-A336M
SC9003
SC9004
SC9002
SOC8001
SOC8003
SOC8000
SOC6000
SOC9000
U1012
U2022
U2001
U3004
U1001
PMM1000
U3001
U2012
U7001
U1002
U2020
U1013
U6001
U6000
U7004
MIC7000
ANT1004
ANT1000
ANT1001
ANT1002
ANT1003
RFS1001
RFS1000
RFS2000
RFS1003
RFS1002
F2000
F1005
F1007
F1004
F1002
F1001
F3000
CN9001
HDC4000
R6825
LED6000

SAMSUNG CONFIDENTIAL
THIS DOCUMENT CONTAINS CONFIDENTIAL
PROPRIETARY INFORMATION THAT IS
SAMSUNG ELECTRONICS CO'S PROPERTY.
DO NOT DISCLOSE TO OR DUPLICATE FOR OTHERS
EXCEPT AS AUTHORIZED BY SAMSUNG.

A33 5G REV0.3A

SM-A3360

2021.12.06

Sheet01 : GSM / WCDMA / LTE / NR(N41) RF
Sheet02 : TRANSCEIVER, SUB ANT
Sheet03 : CONNECTIVITY(BT/WIFI/FM), NFC
Sheet04 : AP(PAPAYA-INTERFACE,GPIO)
Sheet05 : AP(POWER), MEM(uMCP)
Sheet06 : PMIC/SUB PMIC, IF PMIC
Sheet07 : AUDIO Codec, SENSOR, SIM, SD
Sheet08 : CAMERA
Sheet09 : DISPLAY PMIC, C2C

SAMSUNG CONFIDENTIAL
THIS DOCUMENT CONTAINS CONFIDENTIAL
AND PROPRIETARY INFORMATION OF
SAMSUNG ELECTRONICS CO. LTD. PROPERTY.
DO NOT DISCLOSE TO OR DUPLICATE FOR OTHERS
EXCEPT AS AUTHORIZED BY SAMSUNG.

RF PART 1

MAIN ANT1 LB

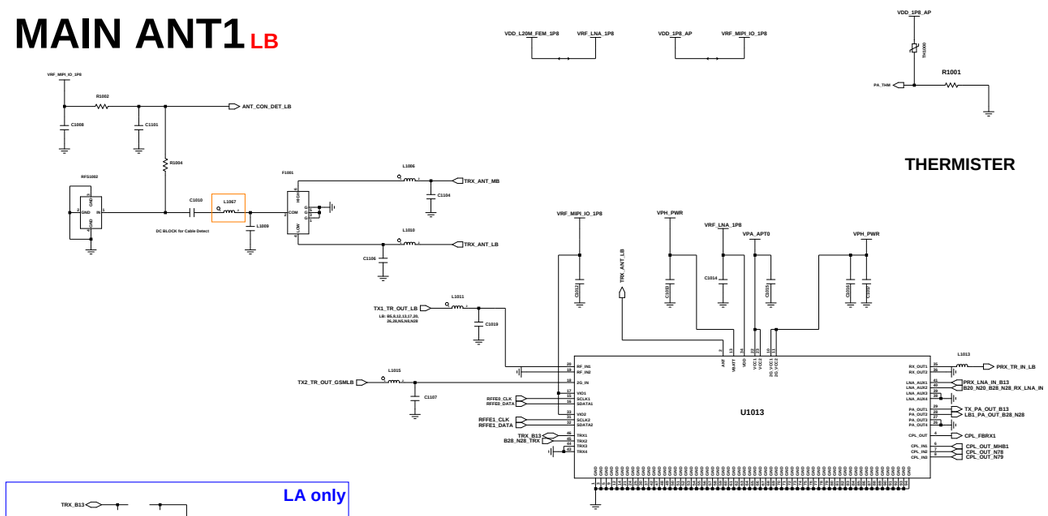

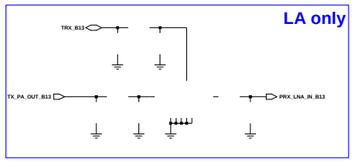

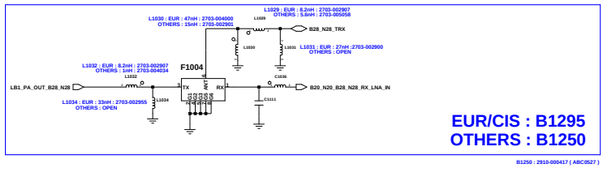

MAIN ANT2

MHB, n78/79 DRX

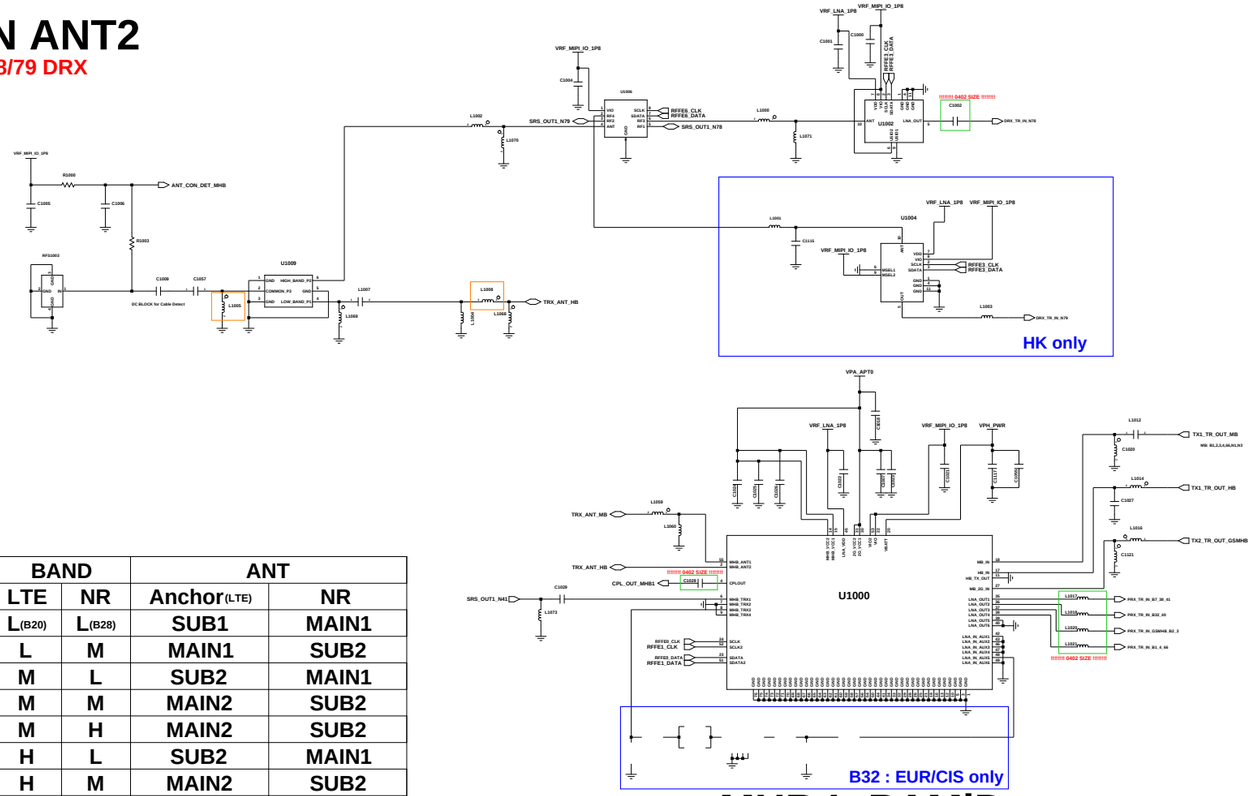

BAND		ANT	
LTE	NR	Anchor(LTE)	NR
L(B20)	L(B28)	SUB1	MAIN1
L	M	MAIN1	SUB2
M	L	SUB2	MAIN1
M	M	MAIN2	SUB2
M	H	MAIN2	SUB2
H	L	SUB2	MAIN1
H	M	MAIN2	SUB2
L/M/H	UHB	MAIN	SUB

SUB ANT1

LB
HB MIMO

EUR/CIS : QDM3525
OTHERS : SFML5E0K001

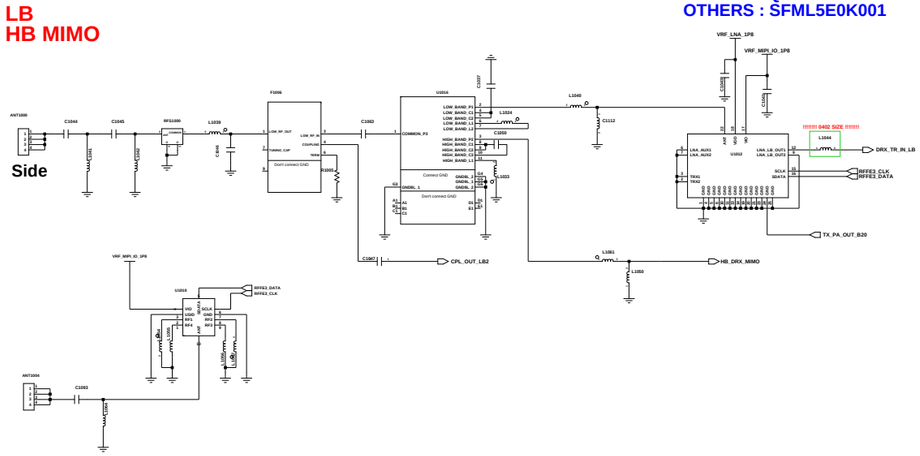

SUB ANT2

GPS, MHB, WiFi 2.4G

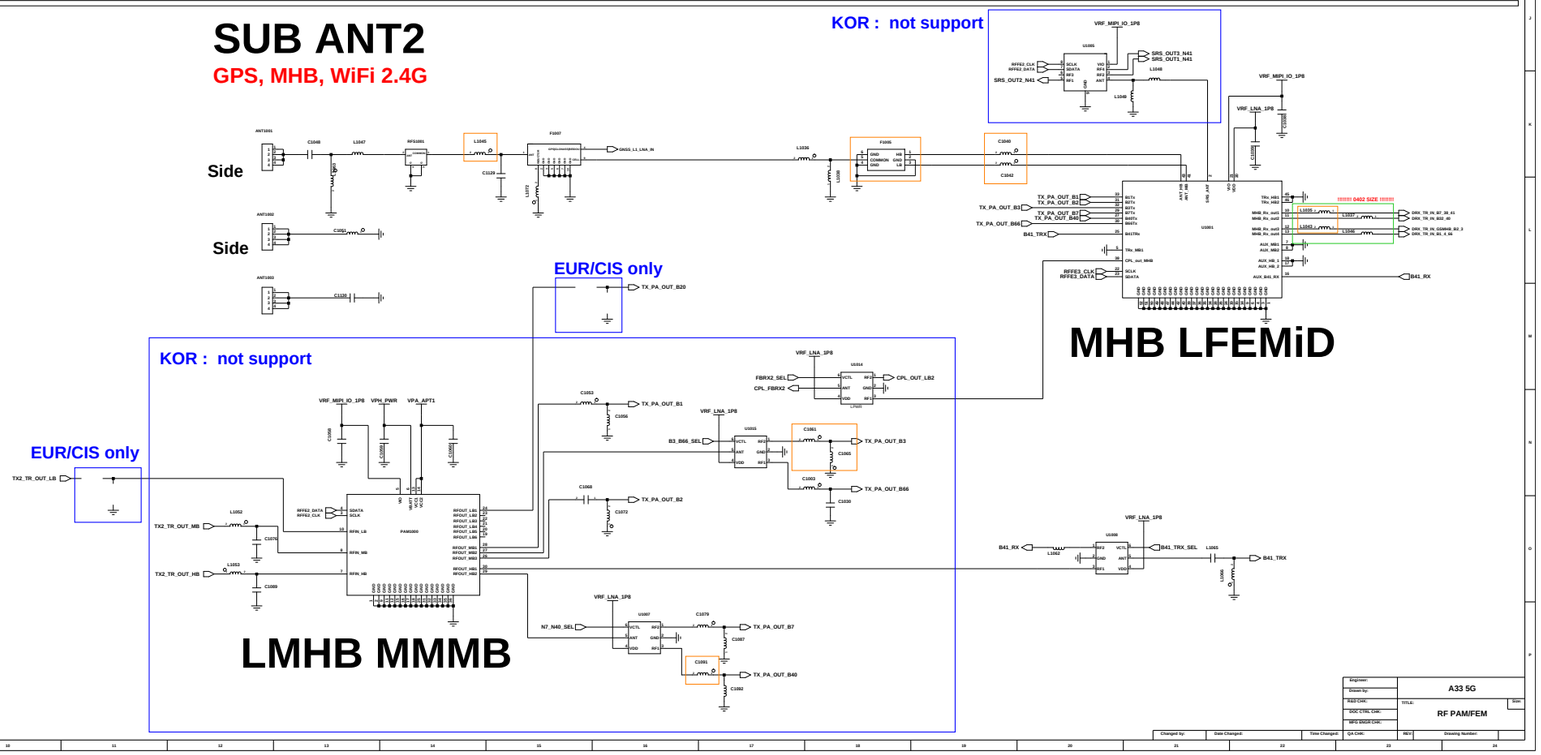

Engineer:	A33 5G
Drawn by:	
R&D CHK:	TITLE: RF PAM/FEM
DOC CTRL CHK:	
SPD SOCR CHK:	
QA CHK:	REV / Drawing Number:

Changed by: | Date Changed: | Time Changed:

SAMSUNG CONFIDENTIAL
THIS DOCUMENT CONTAINS CONFIDENTIAL
AND PROPRIETARY INFORMATION OF
SAMSUNG ELECTRONICS CO. LTD. PROPERTY.
DO NOT DISCLOSE TO OR DUPLICATE FOR OTHERS
EXCEPT AS AUTHORIZED BY SAMSUNG.

TRANSCEIVER (S5511)

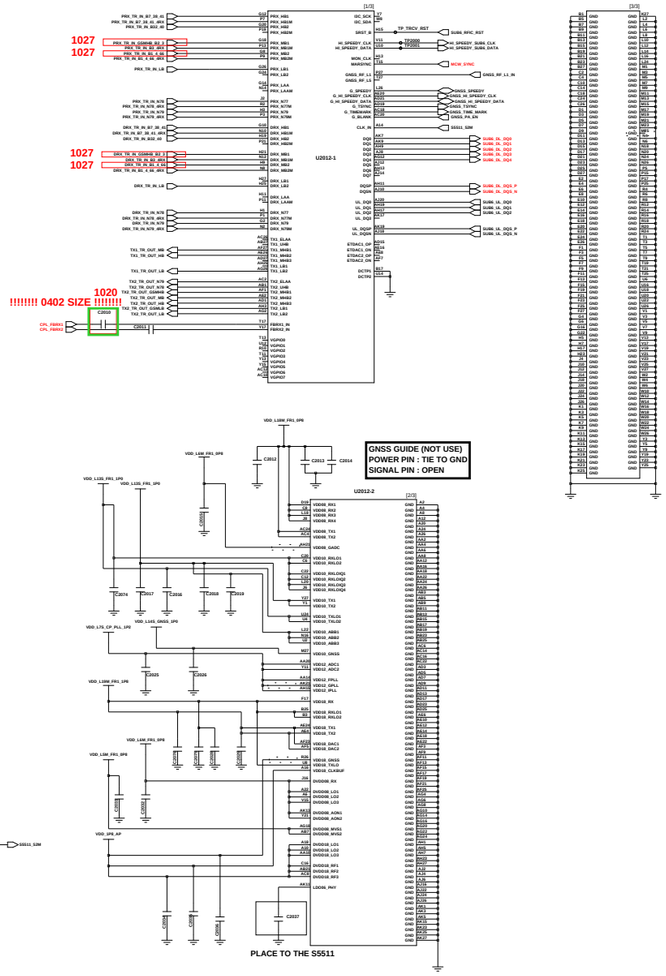

APT0

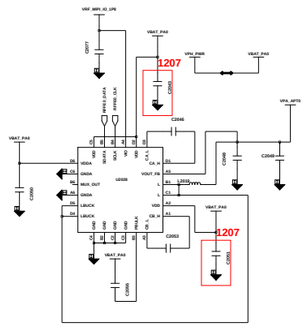

APT1

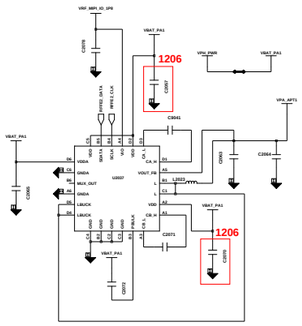

SUB ANT7
n78/79 PRX MIMO

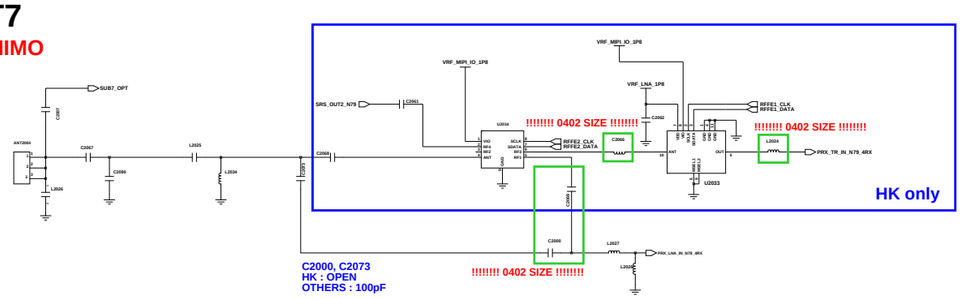

SUB ANT4
N78/79 TRX

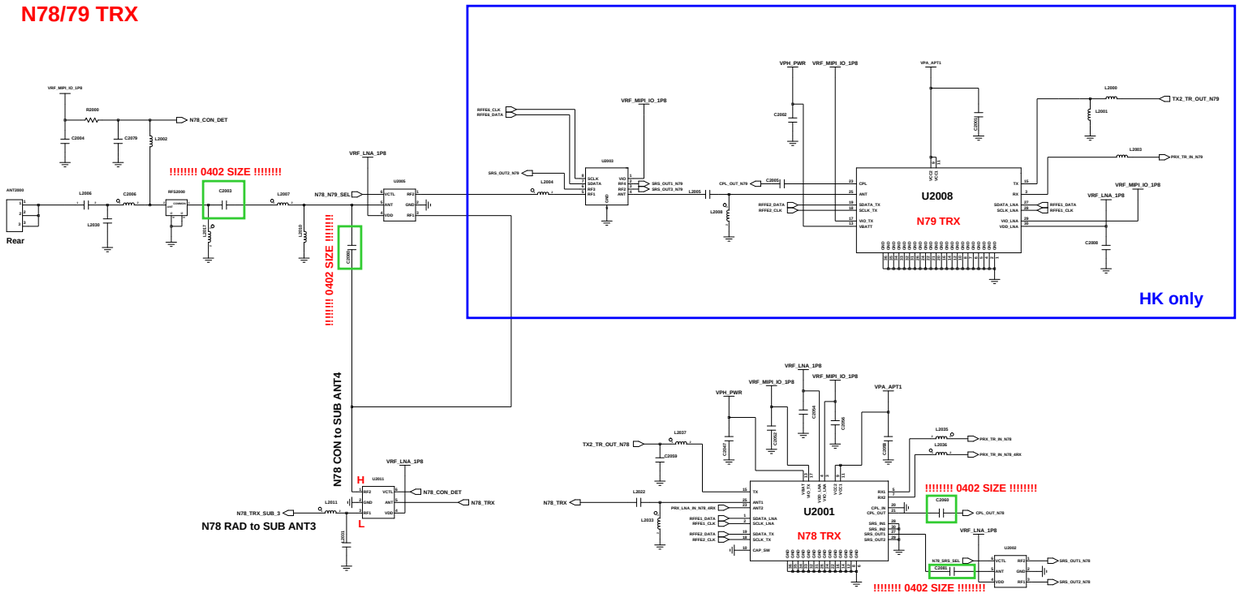

SUB ANT5
MHB MIMO

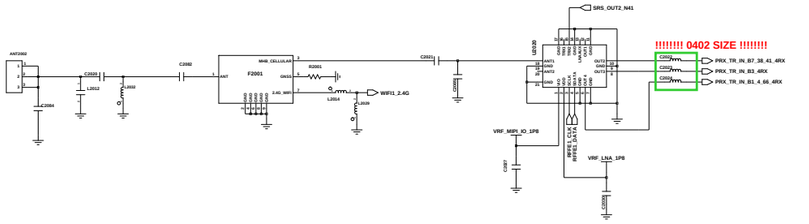

SUB ANT6
n78/79 DRX MIMO
MB MIMO

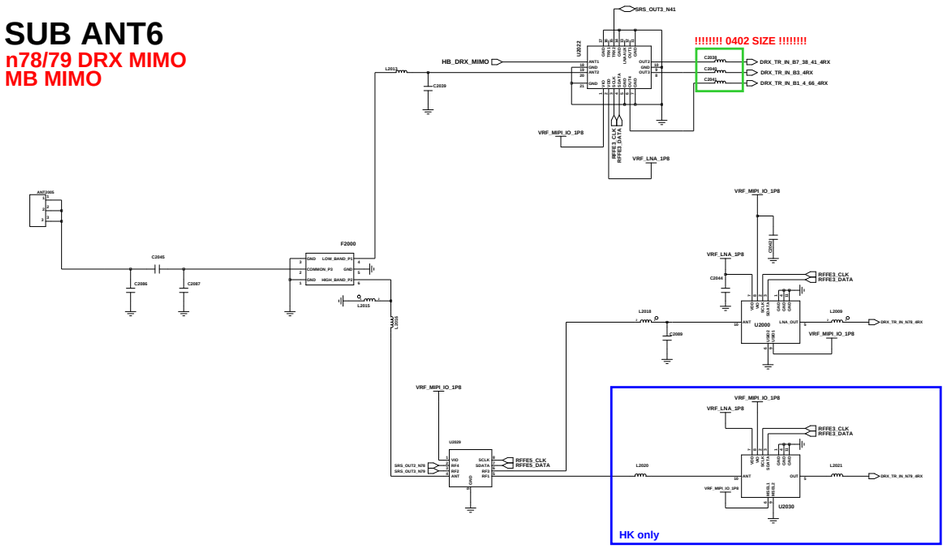

Engineer:	A33 5G
Initiator by:	
PJ/LT Chk:	TITLE: RF TRCV/PAM/APT
SDC Chk: Date:	
MPI Vendor Chk:	
QA Chk:	Drawing Number:

SAMSUNG CONFIDENTIAL
THIS DOCUMENT CONTAINS CONFIDENTIAL
PROPRIETARY INFORMATION THAT IS
SAMSUNG ELECTRONICS CO'S PROPERTY.
DO NOT DISCLOSE TO OR DUPLICATE FOR OTHERS
EXCEPT AS AUTHORIZED BY SAMSUNG.

WIFI/BT/FM

SUB ANT3

WiFi 5G, N78 TRX

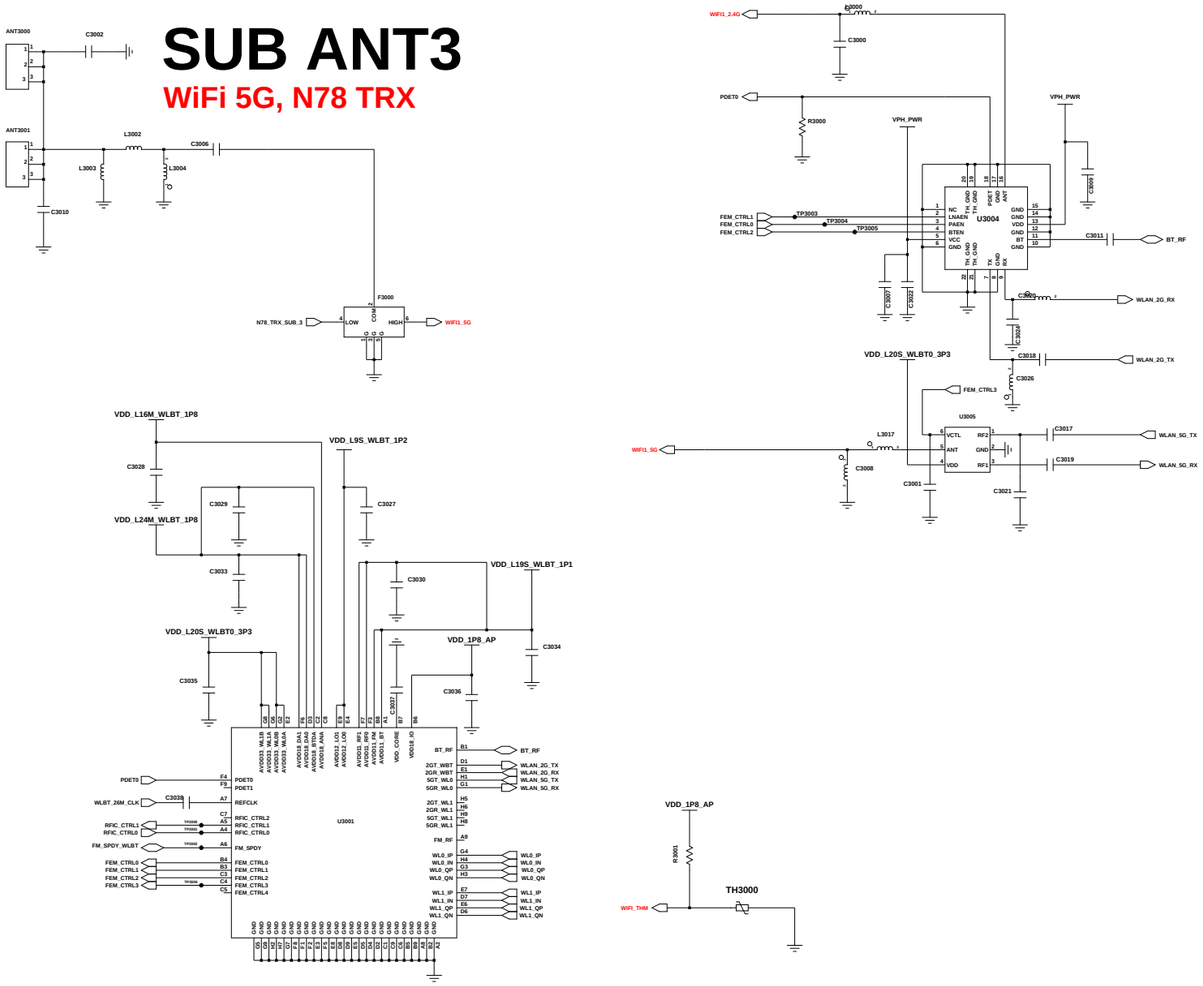

MST

use 106 internal function

GND CCP

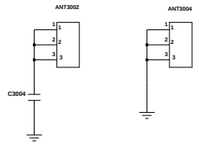

NFC

UICC ONLY / SWA not support

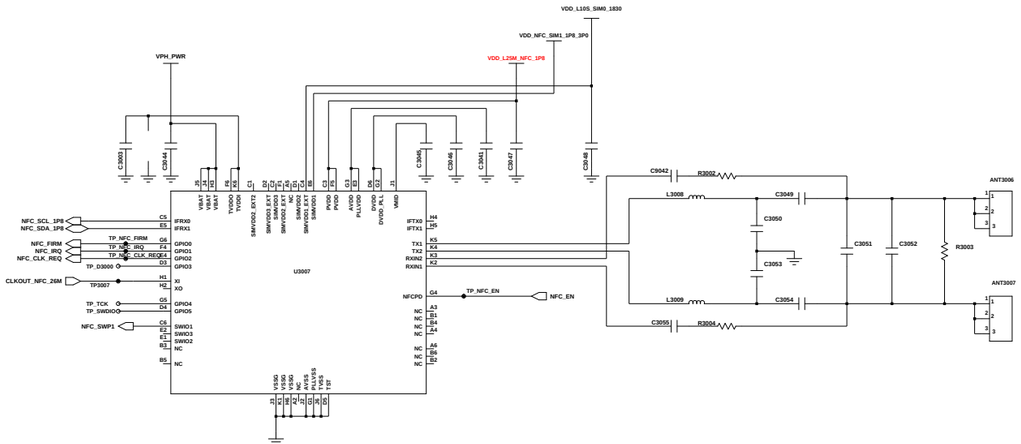

GPS L1 / GNSS/BEIDOU

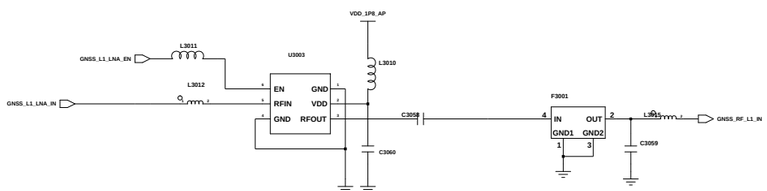

Engineer:	A33 5G
Drawn by:	
R&D CHK:	TITLE: WIFI/NFC/MST/GPS
DOC CTRL CHK:	Size:
MFG ENGR CHK:	
QA CHK:	REV: Drawing Number: Page: 3

Changed by: user118 | Date Changed: | Time Changed:

SAMSUNG CONFIDENTIAL
THIS DOCUMENT CONTAINS CONFIDENTIAL
AND PROPRIETARY INFORMATION OF
SAMSUNG ELECTRONICS CO'S PROPERTY.
DO NOT DISCLOSE TO OR DUPLICATE FOR OTHERS
EXCEPT AS AUTHORIZED BY SAMSUNG.

PAPAYA

UCP400-1

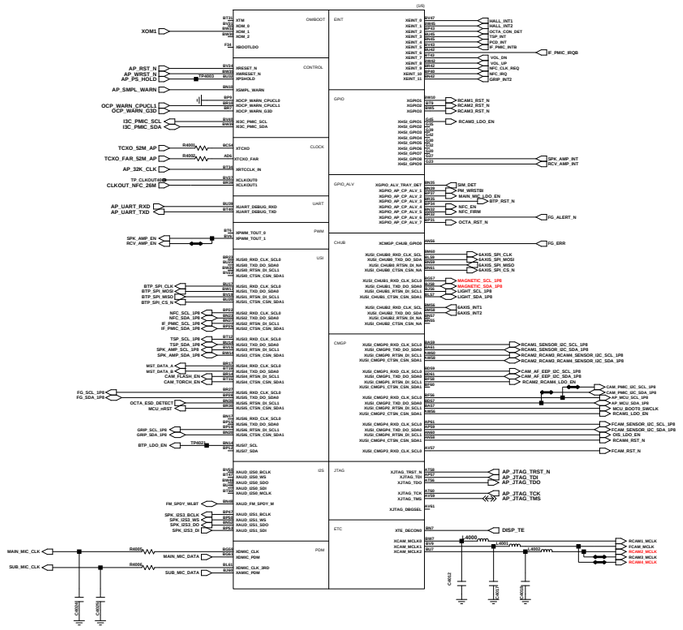

UCP400-2

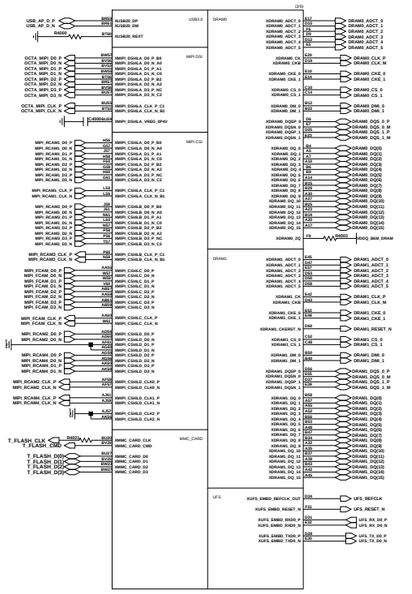

UCP400-3

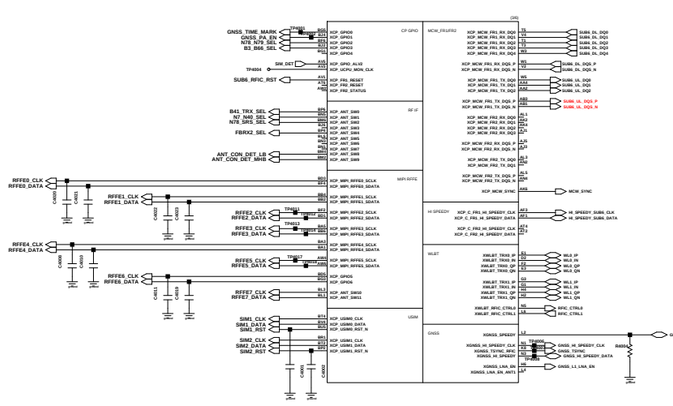

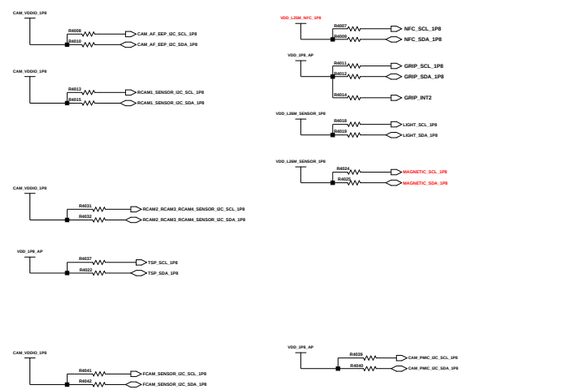

AP HW REV

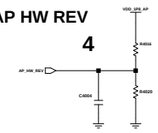

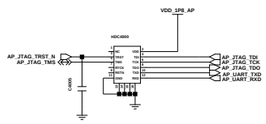

AP JTAG

PIN [3:1]	Function	
OM[2:0]	1st Boot	2nd Boot
000	UFS	USB
001	-----	USB
010	USB	-----
100	SD	USB

iROM BOOT

REV	R1(Kohm)	R2(Kohm)	AP	
0	NC	0	BRINGUP	
1	430	30	R00	
2	390	62	R01	
3	360	91	R02	
4	330	120	R03/R03A	1206
5	300	150		
6	270	180		
7	240	220		
8	200	240		
9	180	270		
10	160	300		
11	120	330		
12	91	360		
13	62	390		
14	30	430		
15	10	NC		

SYSTEM CLOCK

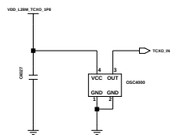

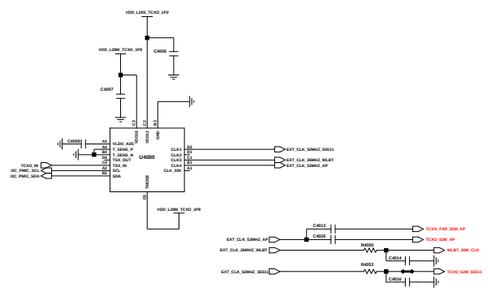

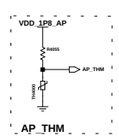

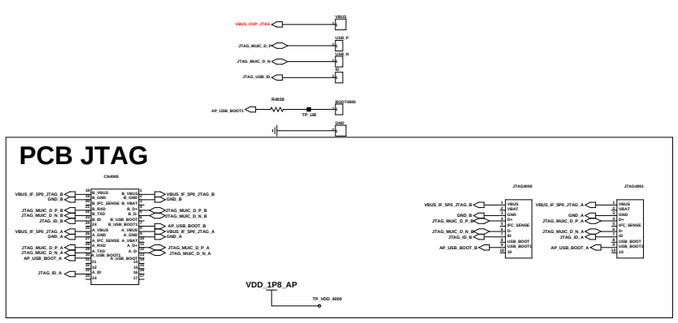

PCB JTAG

Engineer:	A33 5G
Hardware Kyo	
Software Kyo	
ESD CHK:	TITLE:
DOC CTRL CHK:	2020_100916
MFG DOCR CHK:	
QA CHK:	SIZE / Drawing Number: / Page

Changed by	Date Changed	Time Changed
	Friday, September 18, 2020	7:45:31 PM

SAMSUNG CONFIDENTIAL
THIS DOCUMENT CONTAINS CONFIDENTIAL PROPRIETARY INFORMATION THAT IS SAMSUNG ELECTRONICS CO'S PROPERTY. DO NOT DISCLOSE TO OR DUPLICATE FOR OTHERS EXCEPT AS AUTHORIZED BY SAMSUNG.

UCP400-4

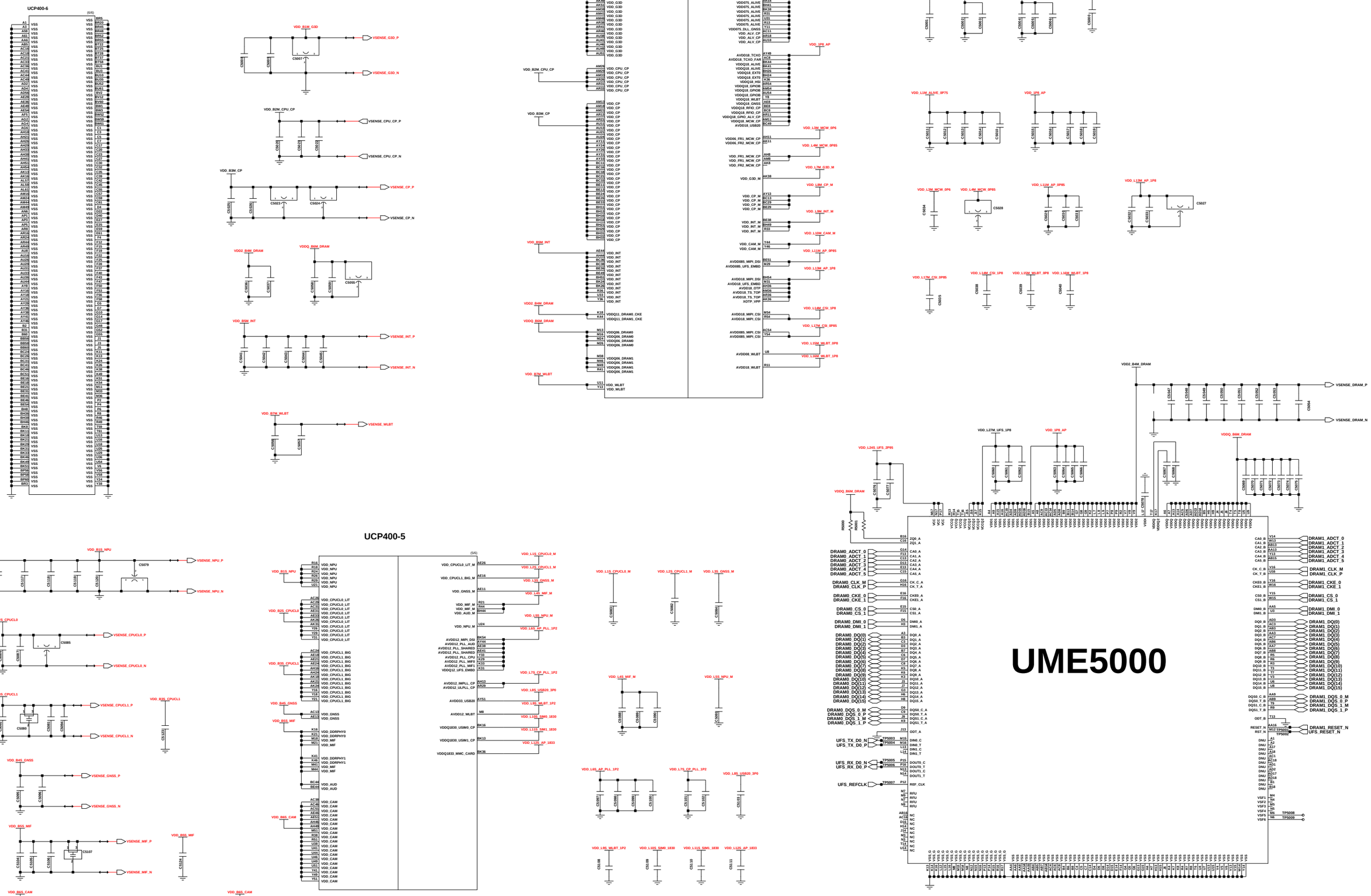

SAMSUNG CONFIDENTIAL
THIS DOCUMENT CONTAINS CONFIDENTIAL
AND PROPRIETARY INFORMATION OF
SAMSUNG ELECTRONICS CO'S PROPERTY.
DO NOT DISCLOSE TO OR DUPLICATE FOR OTHERS
EXCEPT AS AUTHORIZED BY SAMSUNG.

IF PMIC(S2MU106)

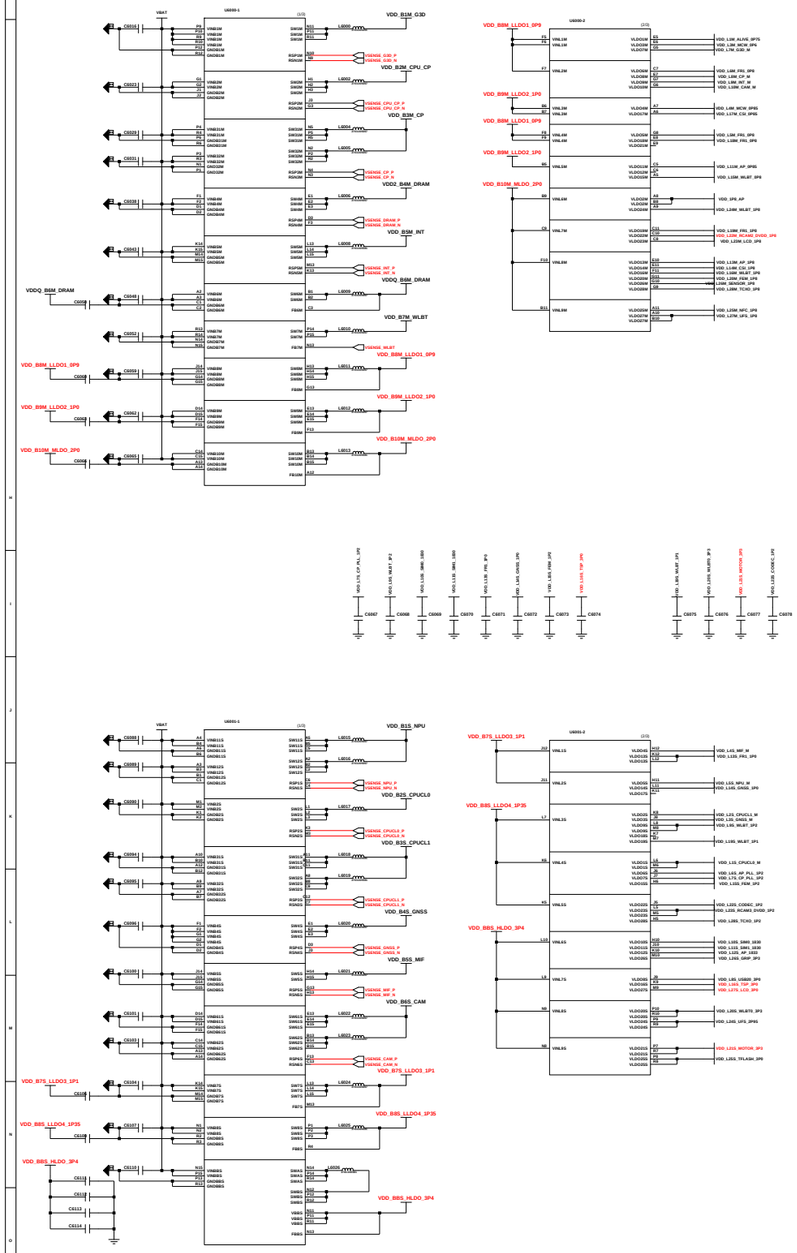

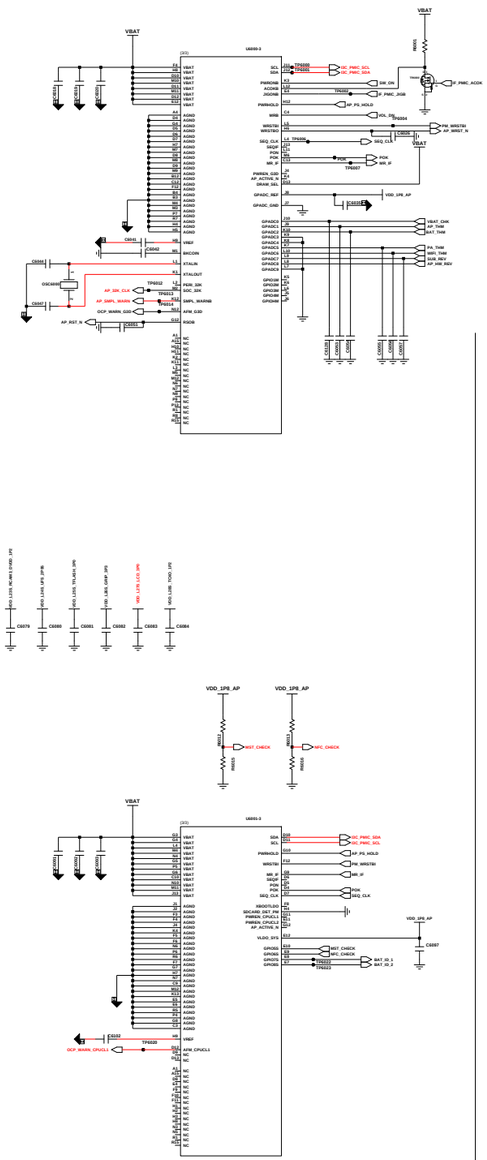

DIRECT CHARGER (SM5451)

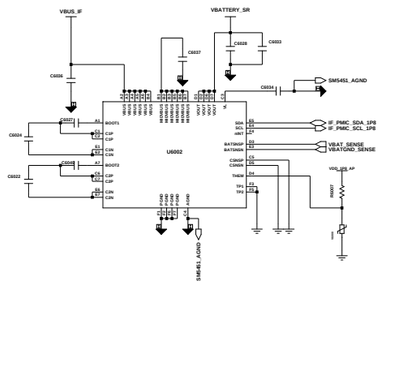

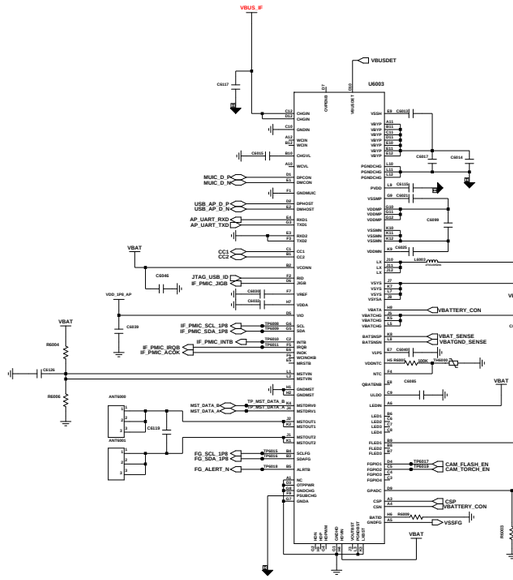

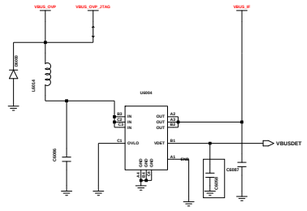

OVP

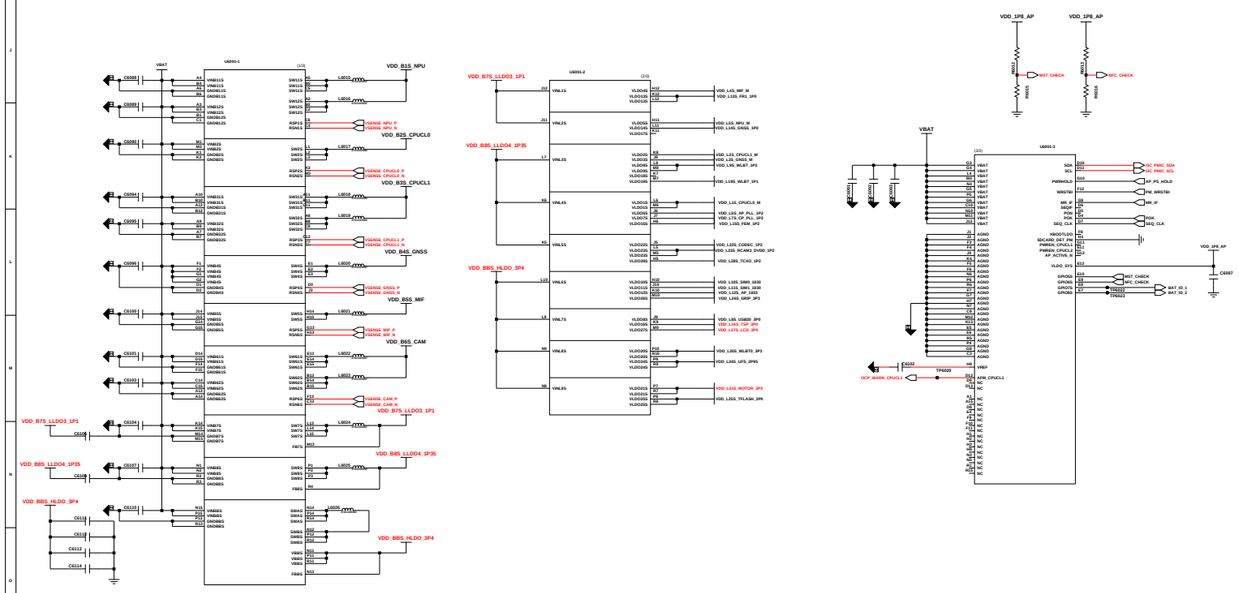

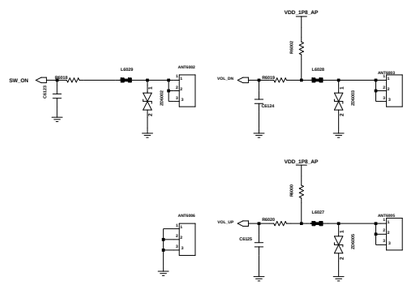

POWER & VOL KEY

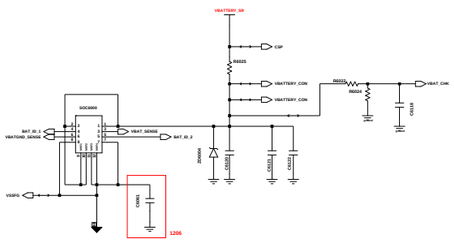

BATTERY CON

Engineer:	A33 5G
Drawn by:	
R&D CHK:	TITLE: POWER/MOT/KEY
SOC CTRL CHK:	
RFI SOCR CHK:	

Size | Changed by: | Date Changed: | Time Changed: | QA CHK: | REV: | Drawing Number:

SAMSUNG CONFIDENTIAL
THIS DOCUMENT CONTAINS CONFIDENTIAL PROPRIETARY INFORMATION THAT IS SAMSUNG ELECTRONICS CO'S PROPERTY. DO NOT DISCLOSE TO OR DUPLICATE FOR OTHERS EXCEPT AS AUTHORIZED BY SAMSUNG.

AUDIO & SENSOR PART

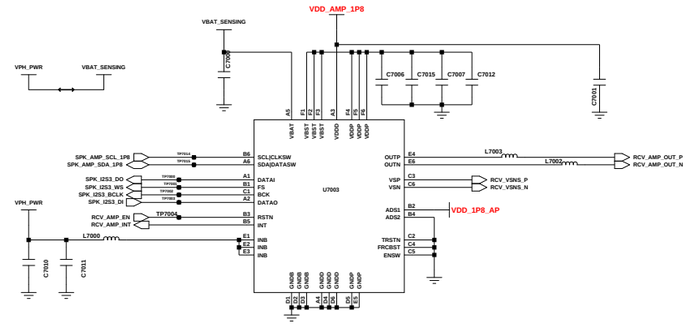

RCV AMP

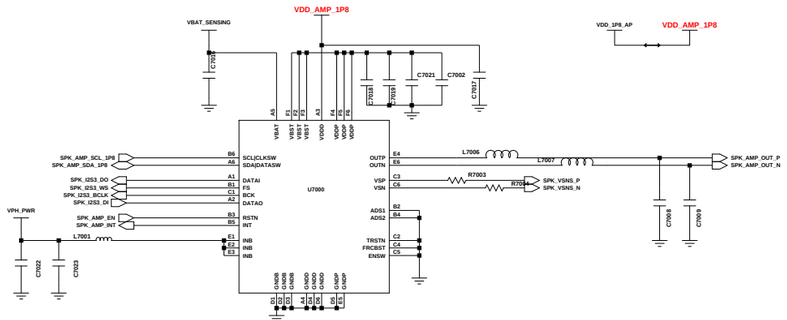

SPK AMP

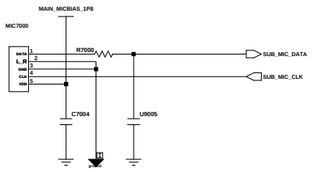

2nd MIC

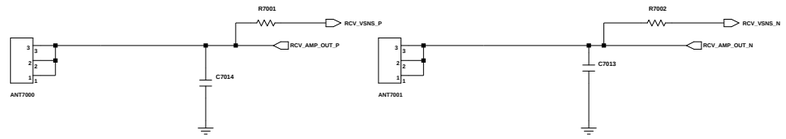

RCV CONTACT

SENSOR

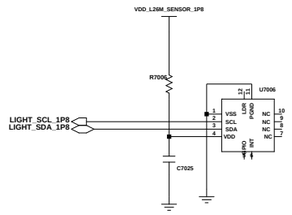

AMBIENT SENSOR

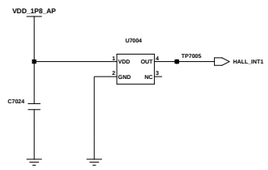

HALL IC

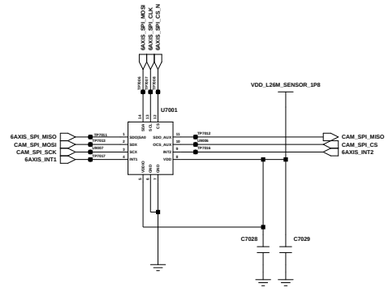

ACC&GYRO SENSOR

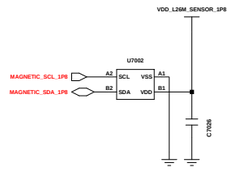

MAGNETIC SENSOR

DUAL SIM / T-FLASH (3in2)

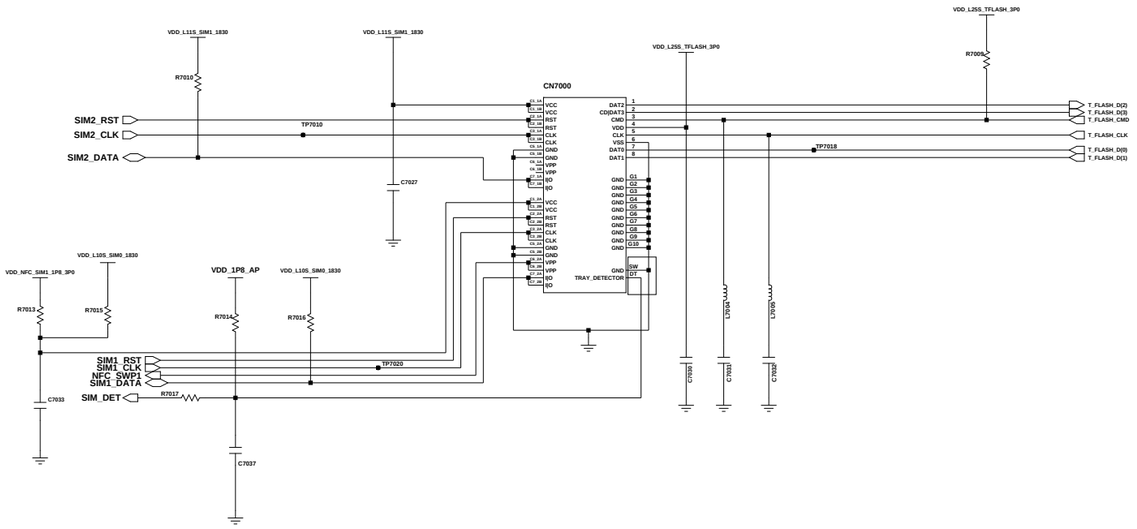

Engineer:			
Drawn by:			
R&D CHK:	TITLE: A33 5G	Size:	
DOC CTRL CHK:			
MFG ENGR CHK:			
Changed by: / Date Changed: / Time Changed:	QA CHK:	REV	Drawing Number: / Page:

SAMSUNG CONFIDENTIAL
THIS DOCUMENT CONTAINS CONFIDENTIAL
PROPRIETARY INFORMATION THAT IS
SAMSUNG ELECTRONICS CO'S PROPERTY.
DO NOT DISCLOSE TO OR DUPLICATE FOR OTHERS
EXCEPT AS AUTHORIZED BY SAMSUNG.

CAMERA

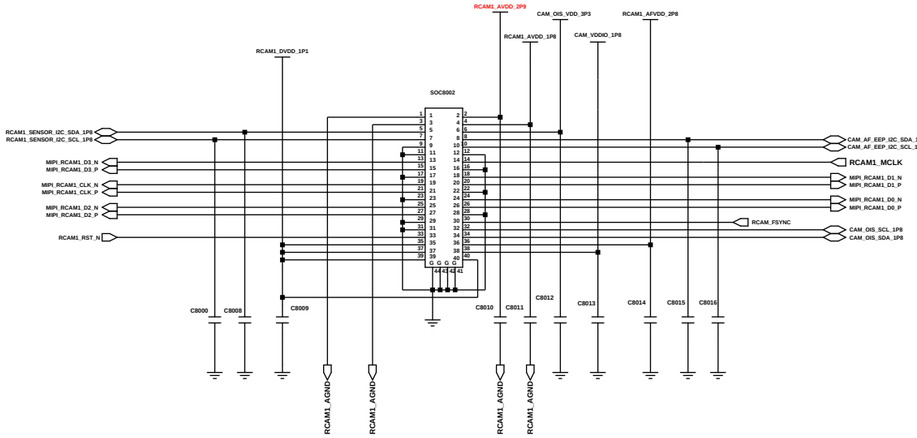

RCAM1_48M OIS(40PIN)

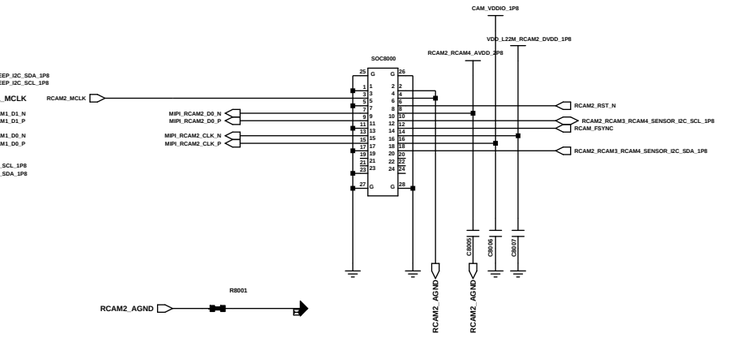

RCAM2_2M_BOKEH_CAMERA(24PIN)

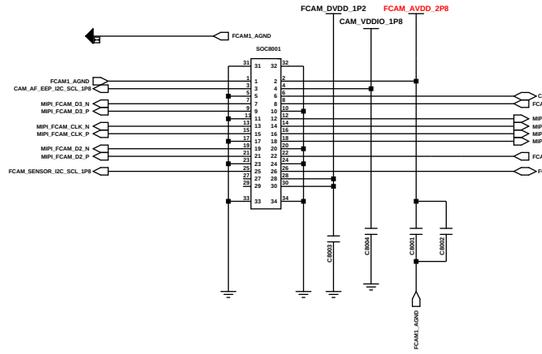

FRONT_13M CAMERA (30PIN)

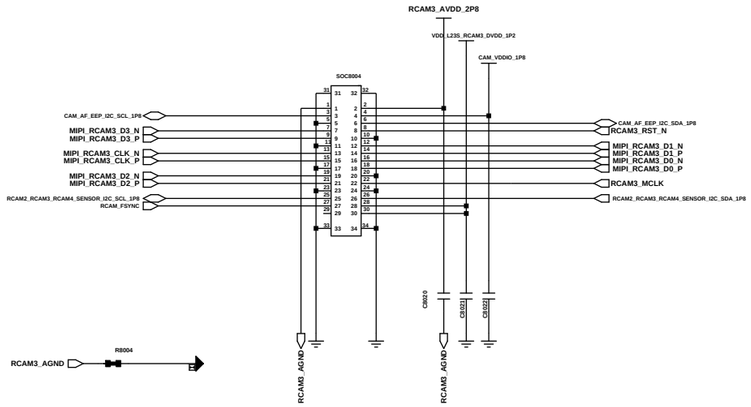

RCAM3_SUPER WIDE_8M CAMERA(30pin)

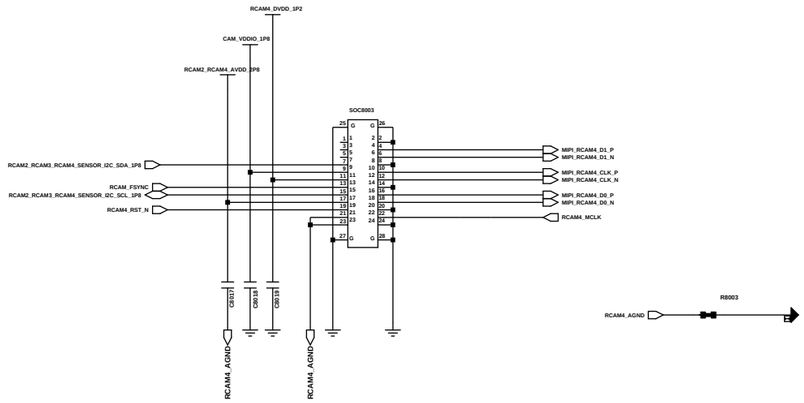

RCAM4_5M_MACRO_CAMERA(24PIN)

CAM PMIC

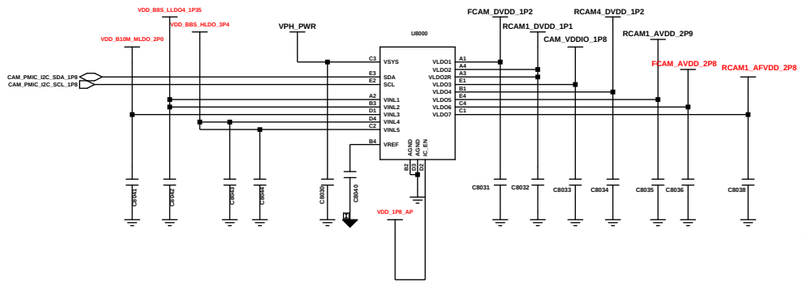

DECO CONTACT

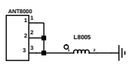

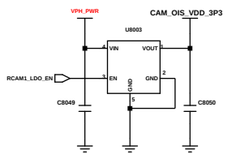

RCAM1_OIS

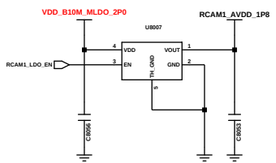

RCAM1_AVDD

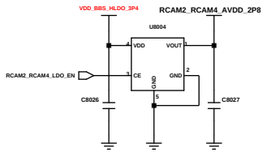

RCAM2_RCAM4_AVDD

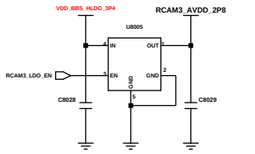

RCAM3_AVDD

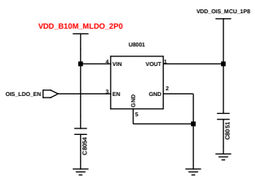

CAM MCU_DVDD

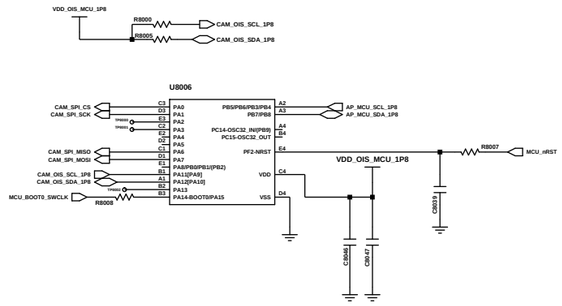

CAM MCU

Engineer:	A33 5G		
Drawn by:			
R&D CHK:	TITLE: CAMERA		Size
DOC CTRL CHK:			
MFG ENGR CHK:			
QA CHK:	REV	Drawing Number:	Page: 7/8

Changed by: | Date Changed: | Time Changed:

SAMSUNG CONFIDENTIAL
THIS DOCUMENT CONTAINS CONFIDENTIAL PROPRIETARY INFORMATION THAT IS SAMSUNG ELECTRONICS CO'S PROPERTY. DO NOT DISCLOSE TO OR DUPLICATE FOR OTHERS EXCEPT AS AUTHORIZED BY SAMSUNG.

C2C (Conn to Conn FPCB)

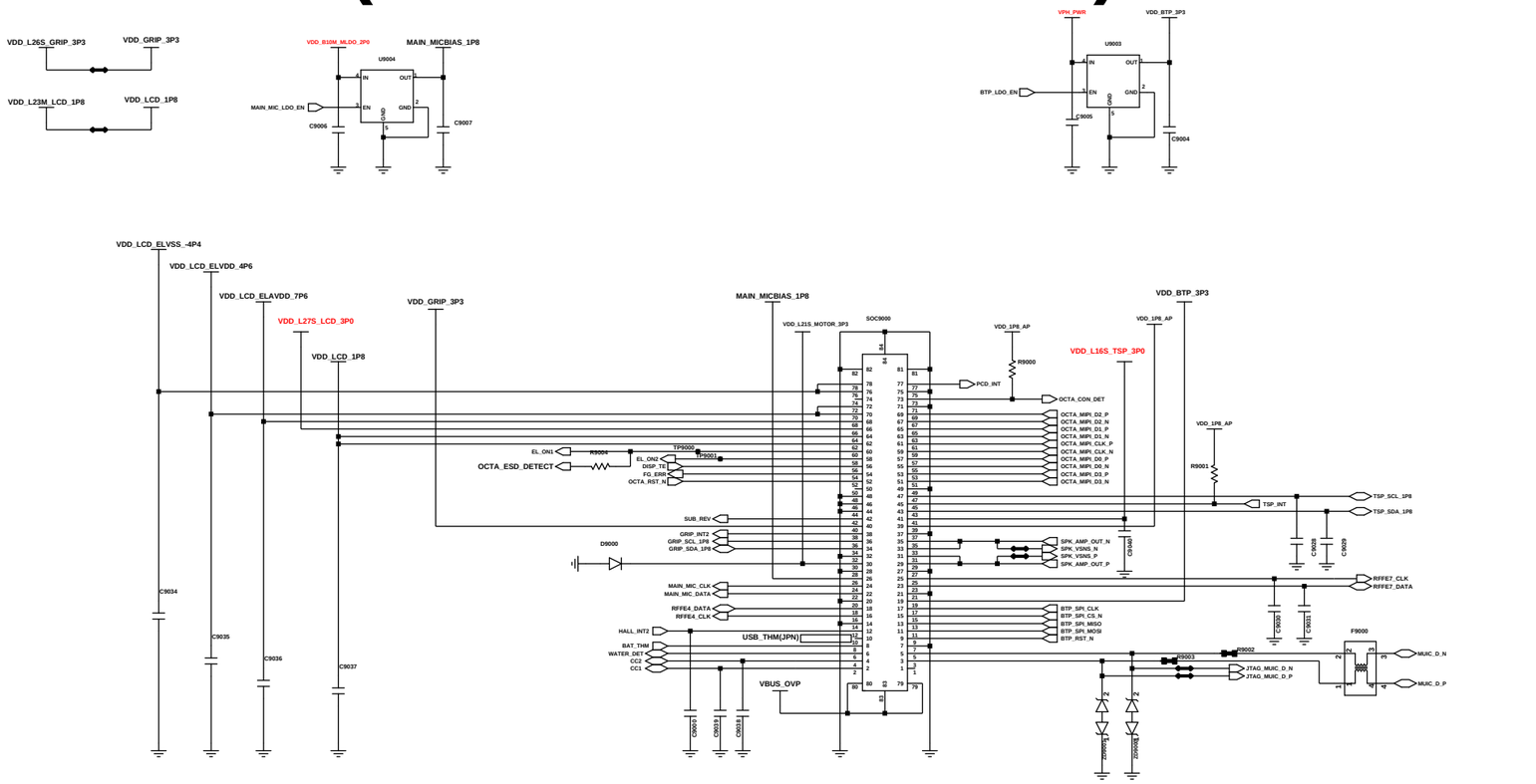

BOTH HOLE

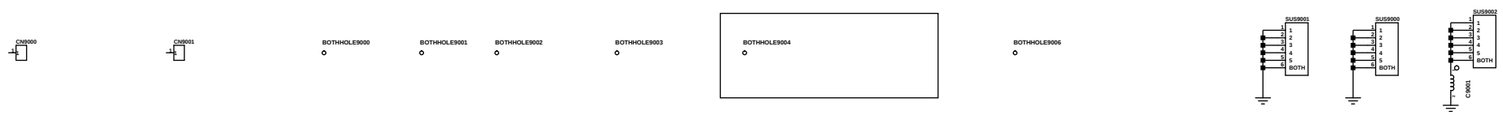

SHIELD CAN

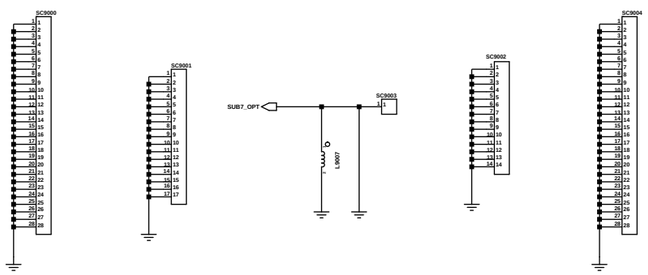

REGION		MEMORY		
R9013 NC	B : EUR	R9017 NC	4/128	
R9014	0 : HK	R9018	6/128	
R9015 NC	N : KOR	R9019 NC	8/128	
R9016 NC	E : SEA, MEA			
R9010 NC	S : SWA			
R9011 NC	M : LA			

DISPLAY

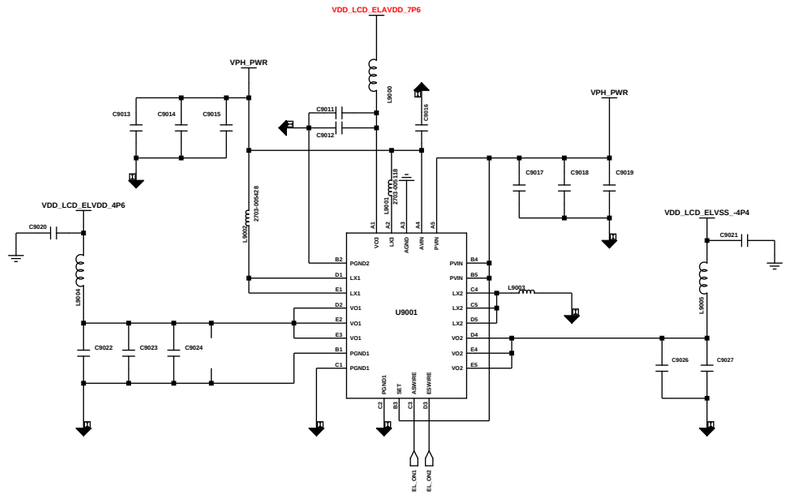

DISPLAY PMIC

Engineer:	A33 5G		
Drawn by:			
R&D CHK:	TITLE: Display	Size:	
DOC CTRL CHK:			
MFG ENGR CHK:			
QA CHK:	REV:	Drawing Number:	Page: 1

Changed by: user28 | Date Changed: Thursday, June 18, 2015 | Time Changed: 10:18:28 am

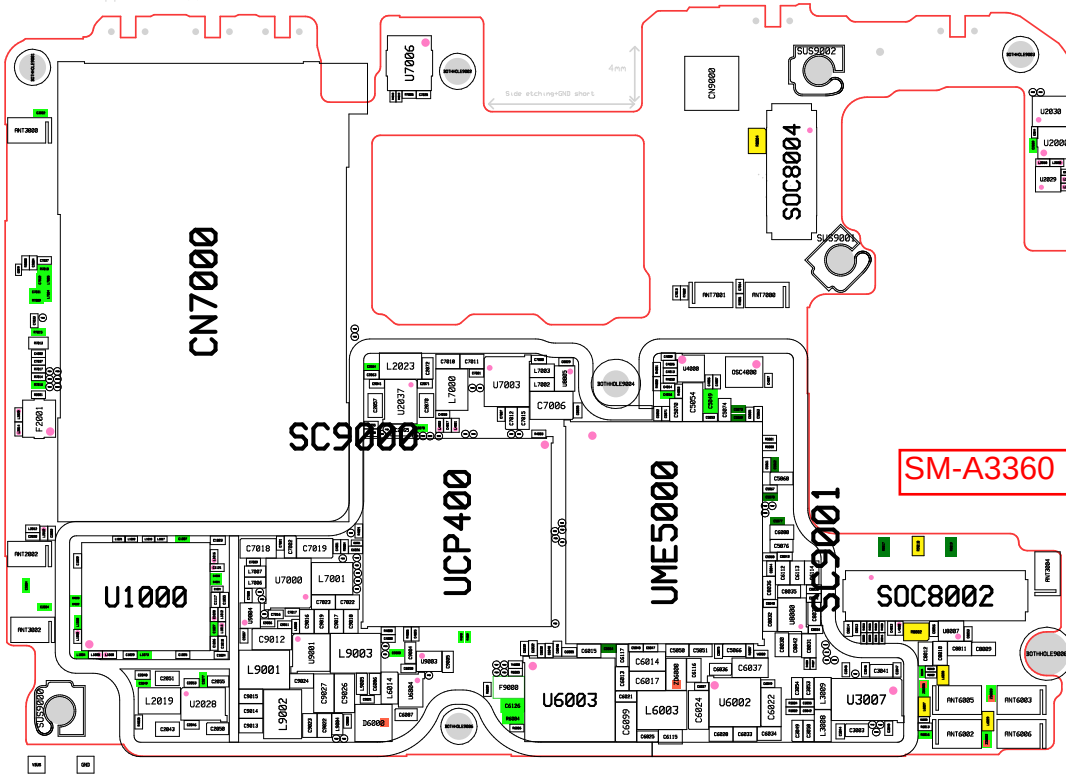
CN7000
SC9000
UCP400
UME5000
SC9001
SOC8004
SOC8002
U1000
U6003
U3007
U2000
U7006
CN9000
SUS9002
SUS9001
SUS9000
SM-A3360

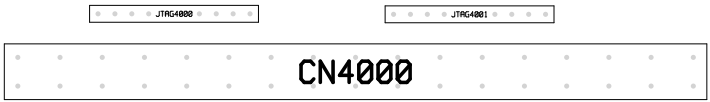
JTAG4000
JTAG4001
CN4000

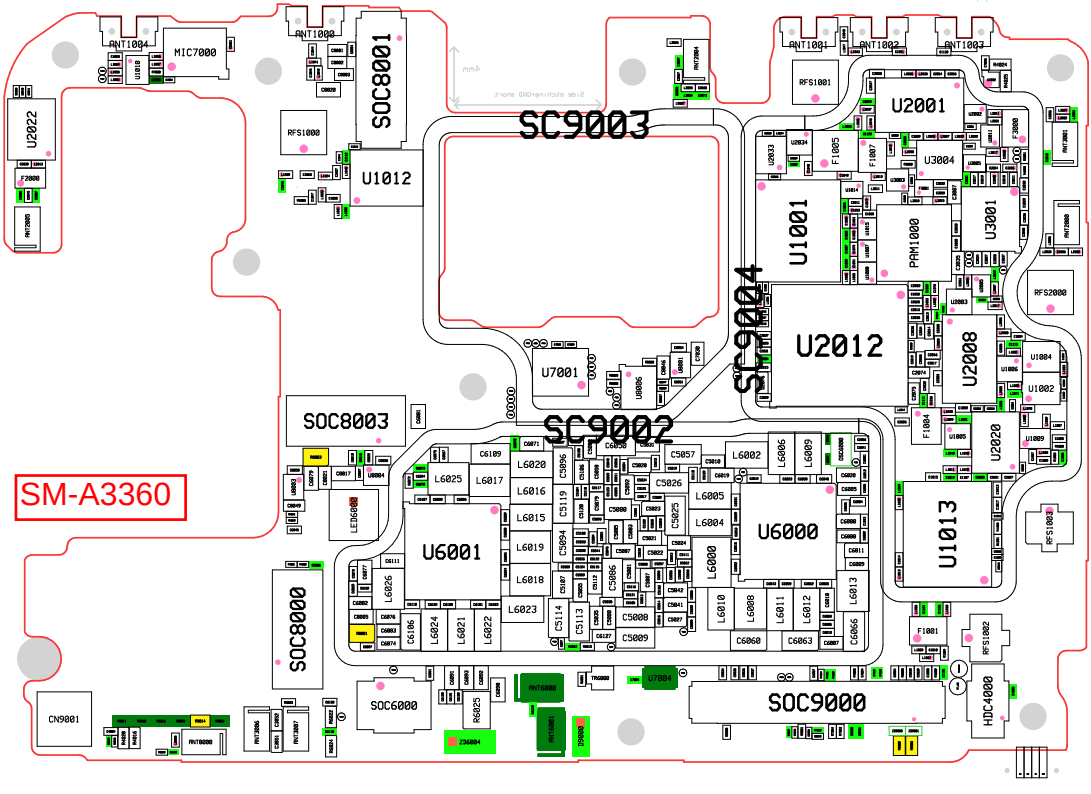
SM-A3360
SC9003
SC9004
SC9002
SOC8001
SOC8003
SOC8000
SOC6000
SOC9000
U1012
U2022
U2001
U3004
U1001
U3001
PRM1000
U2012
U2008
U1004
U1002
U2020
U1013
U7001
U6001
U6000
MIC7000
ANT1004
ANT1000
ANT1001
ANT1002
ANT1003
RFS1001
RFS1000
RFS2000
RFS1002
F2000
F1005
F1007
F1004
F1001
HDC4000
CN9001
LED6000
L6025
L6017
L6020
L6016
L6015
L6019
L6018
L6023
L6026
L6024
L6021
L6022
L6002
L6005
L6004
L6006
L6009
L6010
L6008
L6011
L6012
L6013
L6007
C5057
C5026
C5025
C5008
C5009
C5114
C5113
C5119
C5096
C5094
C5086
C6060
C6063
C6066
C6109
C6111
C6074
C6076
C6083
C6084
C6087
C6088
C6089
C6090
C6091
C6092
C6093
C6094
C6095
C6096
C6097
C6098
C6099
C6100
C6101
C6102
C6103
C6104
C6105
C6106
C6107
C6108
C6110
C6112
C6113
C6114
C6115
C6116
C6117
C6118
C6119
C6120
C6121
C6122
C6123
C6124
C6125
C6126
C6127
C6128
C6129
C6130
C6131
C6132
C6133
C6134
C6135
C6136
C6137
C6138
C6139
C6140
C6141
C6142
C6143
C6144
C6145
C6146
C6147
C6148
C6149
C6150
C6151